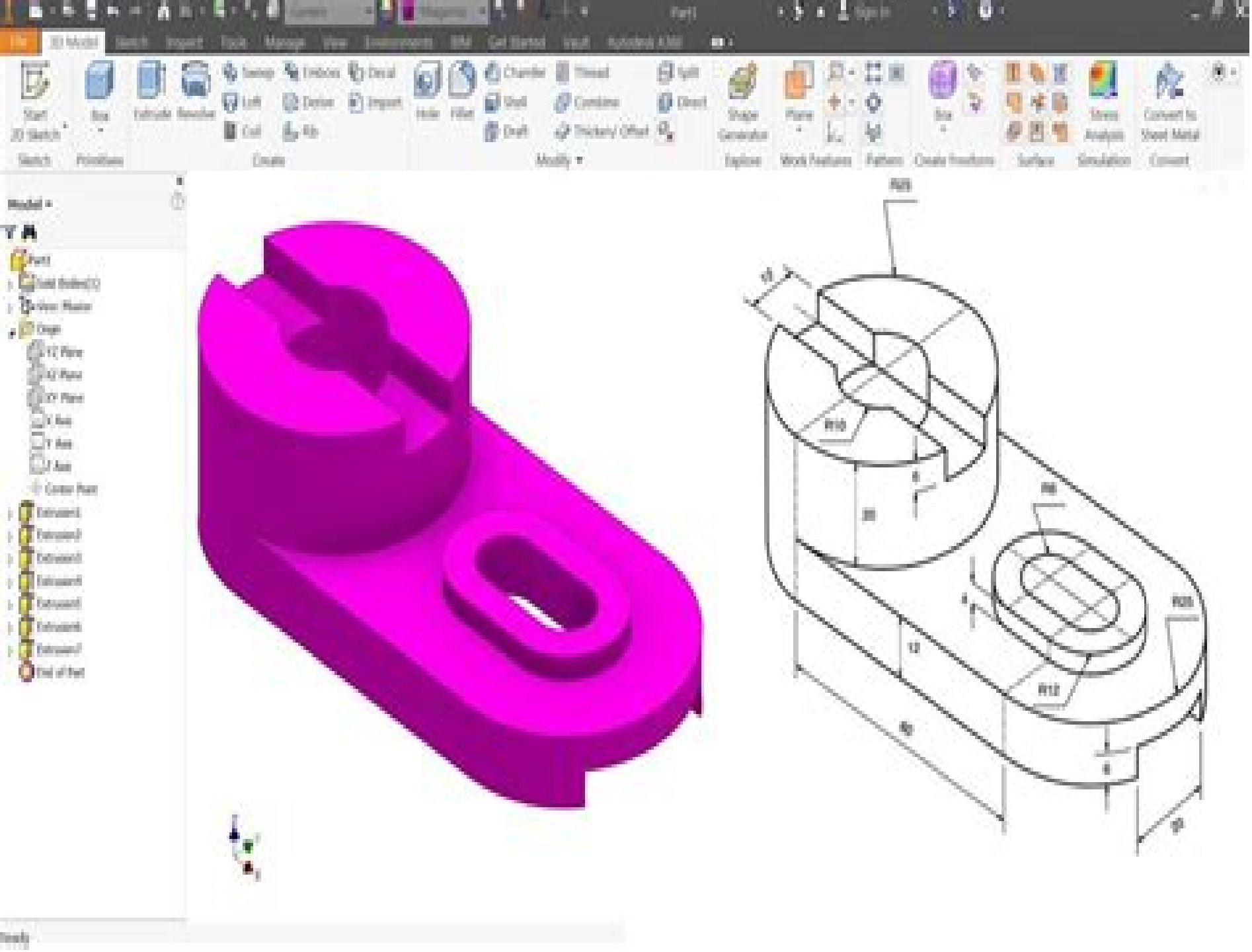
R20
R10
R6
R20
R12

Autodesk Inventor 4 Tutorial

Ying Liu

Autodesk Inventor 4 Tutorial:

Ignite the flame of optimism with Crafted by is motivational masterpiece, Find Positivity in **Autodesk Inventor 4 Tutorial** . In a downloadable PDF format (Download in PDF: *), this ebook is a beacon of encouragement. Download now and let the words propel you towards a brighter, more motivated tomorrow.

https://rehabmart.x-shops.com/About/publication/HomePages/case_821b_loader_service_manual.pdf

Table of Contents Autodesk Inventor 4 Tutorial

1. Understanding the eBook Autodesk Inventor 4 Tutorial
    - The Rise of Digital Reading Autodesk Inventor 4 Tutorial
    - Advantages of eBooks Over Traditional Books
2. Identifying Autodesk Inventor 4 Tutorial
    - Exploring Different Genres
    - Considering Fiction vs. Non-Fiction
    - Determining Your Reading Goals
3. Choosing the Right eBook Platform
    - Popular eBook Platforms
    - Features to Look for in an Autodesk Inventor 4 Tutorial
    - User-Friendly Interface
4. Exploring eBook Recommendations from Autodesk Inventor 4 Tutorial
    - Personalized Recommendations
    - Autodesk Inventor 4 Tutorial User Reviews and Ratings
    - Autodesk Inventor 4 Tutorial and Bestseller Lists
5. Accessing Autodesk Inventor 4 Tutorial Free and Paid eBooks
    - Autodesk Inventor 4 Tutorial Public Domain eBooks
    - Autodesk Inventor 4 Tutorial eBook Subscription Services
    - Autodesk Inventor 4 Tutorial Budget-Friendly Options
6. Navigating Autodesk Inventor 4 Tutorial eBook Formats

- ePub, PDF, MOBI, and More
- Autodesk Inventor 4 Tutorial Compatibility with Devices
- Autodesk Inventor 4 Tutorial Enhanced eBook Features

7. Enhancing Your Reading Experience
    - Adjustable Fonts and Text Sizes of Autodesk Inventor 4 Tutorial
    - Highlighting and Note-Taking Autodesk Inventor 4 Tutorial
    - Interactive Elements Autodesk Inventor 4 Tutorial
8. Staying Engaged with Autodesk Inventor 4 Tutorial
    - Joining Online Reading Communities
    - Participating in Virtual Book Clubs
    - Following Authors and Publishers Autodesk Inventor 4 Tutorial
9. Balancing eBooks and Physical Books Autodesk Inventor 4 Tutorial
    - Benefits of a Digital Library
    - Creating a Diverse Reading Collection Autodesk Inventor 4 Tutorial
10. Overcoming Reading Challenges
    - Dealing with Digital Eye Strain
    - Minimizing Distractions
    - Managing Screen Time
11. Cultivating a Reading Routine Autodesk Inventor 4 Tutorial
    - Setting Reading Goals Autodesk Inventor 4 Tutorial
    - Carving Out Dedicated Reading Time
12. Sourcing Reliable Information of Autodesk Inventor 4 Tutorial
    - Fact-Checking eBook Content of Autodesk Inventor 4 Tutorial
    - Distinguishing Credible Sources
13. Promoting Lifelong Learning
    - Utilizing eBooks for Skill Development
    - Exploring Educational eBooks
14. Embracing eBook Trends
    - Integration of Multimedia Elements
    - Interactive and Gamified eBooks

Autodesk Inventor 4 Tutorial Introduction

In the digital age, access to information has become easier than ever before. The ability to download Autodesk Inventor 4 Tutorial has revolutionized the way we consume written content. Whether you are a student looking for course material, an avid reader searching for your next favorite book, or a professional seeking research papers, the option to download Autodesk Inventor 4 Tutorial has opened up a world of possibilities. Downloading Autodesk Inventor 4 Tutorial provides numerous advantages over physical copies of books and documents. Firstly, it is incredibly convenient. Gone are the days of carrying around heavy textbooks or bulky folders filled with papers. With the click of a button, you can gain immediate access to valuable resources on any device. This convenience allows for efficient studying, researching, and reading on the go. Moreover, the cost-effective nature of downloading Autodesk Inventor 4 Tutorial has democratized knowledge. Traditional books and academic journals can be expensive, making it difficult for individuals with limited financial resources to access information. By offering free PDF downloads, publishers and authors are enabling a wider audience to benefit from their work. This inclusivity promotes equal opportunities for learning and personal growth. There are numerous websites and platforms where individuals can download Autodesk Inventor 4 Tutorial. These websites range from academic databases offering research papers and journals to online libraries with an expansive collection of books from various genres. Many authors and publishers also upload their work to specific websites, granting readers access to their content without any charge. These platforms not only provide access to existing literature but also serve as an excellent platform for undiscovered authors to share their work with the world. However, it is essential to be cautious while downloading Autodesk Inventor 4 Tutorial. Some websites may offer pirated or illegally obtained copies of copyrighted material. Engaging in such activities not only violates copyright laws but also undermines the efforts of authors, publishers, and researchers. To ensure ethical downloading, it is advisable to utilize reputable websites that prioritize the legal distribution of content. When downloading Autodesk Inventor 4 Tutorial, users should also consider the potential security risks associated with online platforms. Malicious actors may exploit vulnerabilities in unprotected websites to distribute malware or steal personal information. To protect themselves, individuals should ensure their devices have reliable antivirus software installed and validate the legitimacy of the websites they are downloading from. In conclusion, the ability to download Autodesk Inventor 4 Tutorial has transformed the way we access information. With the convenience, cost-effectiveness, and accessibility it offers, free PDF downloads have become a popular choice for students, researchers, and book lovers worldwide. However, it is crucial to engage in ethical downloading practices and prioritize personal security when utilizing online platforms. By doing so, individuals can make the most of the vast array of free PDF resources available and embark on a journey of continuous learning and intellectual growth.

FAQs About Autodesk Inventor 4 Tutorial Books

How do I know which eBook platform is the best for me? Finding the best eBook platform depends on your reading preferences and device compatibility. Research different platforms, read user reviews, and explore their features before making a choice. Are free eBooks of good quality? Yes, many reputable platforms offer high-quality free eBooks, including classics and public domain works. However, make sure to verify the source to ensure the eBook credibility. Can I read eBooks without an eReader? Absolutely! Most eBook platforms offer webbased readers or mobile apps that allow you to read eBooks on your computer, tablet, or smartphone. How do I avoid digital eye strain while reading eBooks? To prevent digital eye strain, take regular breaks, adjust the font size and background color, and ensure proper lighting while reading eBooks. What the advantage of interactive eBooks? Interactive eBooks incorporate multimedia elements, quizzes, and activities, enhancing the reader engagement and providing a more immersive learning experience. Autodesk Inventor 4 Tutorial is one of the best book in our library for free trial. We provide copy of Autodesk Inventor 4 Tutorial in digital format, so the resources that you find are reliable. There are also many Ebooks of related with Autodesk Inventor 4 Tutorial. Where to download Autodesk Inventor 4 Tutorial online for free? Are you looking for Autodesk Inventor 4 Tutorial PDF? This is definitely going to save you time and cash in something you should think about. If you trying to find then search around for online. Without a doubt there are numerous these available and many of them have the freedom. However without doubt you receive whatever you purchase. An alternate way to get ideas is always to check another Autodesk Inventor 4 Tutorial. This method for see exactly what may be included and adopt these ideas to your book. This site will almost certainly help you save time and effort, money and stress. If you are looking for free books then you really should consider finding to assist you try this. Several of Autodesk Inventor 4 Tutorial are for sale to free while some are payable. If you arent sure if the books you would like to download works with for usage along with your computer, it is possible to download free trials. The free guides make it easy for someone to free access online library for download books to your device. You can get free download on free trial for lots of books categories. Our library is the biggest of these that have literally hundreds of thousands of different products categories represented. You will also see that there are specific sites catered to different product types or categories, brands or niches related with Autodesk Inventor 4 Tutorial. So depending on what exactly you are searching, you will be able to choose e books to suit your own need. Need to access completely for Campbell Biology Seventh Edition book? Access Ebook without any digging. And by having access to our ebook online or by storing it on your computer, you have convenient answers with Autodesk Inventor 4 Tutorial To get started finding Autodesk Inventor 4 Tutorial, you are right to find our website which has a comprehensive collection of books online. Our library is the biggest of these that have literally hundreds of thousands of different products represented. You will also see that there are specific sites catered to different categories or niches related with Autodesk Inventor 4 Tutorial So depending on what exactly you are searching, you will be

able tochoose ebook to suit your own need. Thank you for reading Autodesk Inventor 4 Tutorial. Maybe you have knowledge that, people have search numerous times for their favorite readings like this Autodesk Inventor 4 Tutorial, but end up in harmful downloads. Rather than reading a good book with a cup of coffee in the afternoon, instead they juggled with some harmful bugs inside their laptop. Autodesk Inventor 4 Tutorial is available in our book collection an online access to it is set as public so you can download it instantly. Our digital library spans in multiple locations, allowing you to get the most less latency time to download any of our books like this one. Merely said, Autodesk Inventor 4 Tutorial is universally compatible with any devices to read.

Find Autodesk Inventor 4 Tutorial :

case 821b loader service manual
business studies september 2014 memo kzn
~~2nd term biology scheme of work in ss2~~
2nd semester final ied
onity ht22 user manual
ball stretching guide
how to list & sell real estate in the 21st century
2nd semester final chemistry high school
~~hidden italy a bilingual edition of italian dialect poetry~~
biology hl paper 3 jeromeibbiology
science research paper template
4th grade tcap coach practice test
4024 june 2013 paper 22
iteration of rational functions x analyt
the marriage mirage

Autodesk Inventor 4 Tutorial :

die kleinbürger drama in vier aufzügen amazon ca - Jul 02 2022
web amazon in buy die kleinbürger drama in vier aufzügen book online at best prices in india on amazon in read die kleinbürger drama in vier aufzügen book reviews

die kleinbürger drama in vier aufzügen german edition - Nov 06 2022
web oct 14 2016 die kleinbürger drama in vier aufzügen german edition gorki maxim scholz august on amazon com free shipping on qualifying offers die kleinbürger
die kleinbürger drama in vier aufzügen by scholz august - May 12 2023
web buy die kleinbürger drama in vier aufzügen by scholz august gorki maxim online on amazon ae at best prices fast and free shipping free returns cash on delivery available
die kleinbürger drama in vier aufzügen paperback □□□ □□□□□□ - Feb 26 2022
web maxim gorki die kleinburger drama in vier aufzugen erstdruck sankt petersburger verlagsgesellschaft 1902 hier in der uebersetzung von august scholz berlin 1902
die kleinbrger drama in vier aufzgen google books - Jun 13 2023
web maxim gorki die kleinbürger drama in vier aufzügen edition holzinger taschenbuch berliner ausgabe 2016 durchgesehener neusatz bearbeitet und eingerichtet von
die kleinbürger drama in vier aufzügen paperback - Aug 03 2022
web select the department you want to search in
die kleinbürger drama in vier aufzügen paperback amazon - Apr 30 2022
web hello sign in account lists returns orders cart
die kleinbürger drama in vier aufzügen paperback - Apr 11 2023
web maxim gorki die kleinb rger drama in vier aufz gen edition holzinger taschenbuch berliner ausgabe 2016 durchgesehener neusatz bearbeitet und eingerichtet von
die kleinbürger drama in vier aufzügen paperback amazon co uk - Feb 09 2023
web buy die kleinbürger drama in vier aufzügen by gorki maxim from amazon s fiction books store everyday low prices on a huge range of new releases and classic fiction
die kleinburger drama in vier aufzugen maxim gorki - Jan 28 2022
web hello sign in account lists returns orders cart
die kleinbürger drama in vier aufzügen ebook amazon de - Dec 07 2022
web maxim gorki die kleinbürger drama in vier aufzügen erstdruck sankt petersburger verlagsgesellschaft 1902 hier in der Übersetzung von august scholz berlin 1902 neuausgabe herausgegeben von karl maria guth berlin 2016
buy die kleinbürger drama in vier aufzügen book online at low - Jun 01 2022
web hello sign in account lists returns orders cart
die kleinbürger drama in vier aufzügen paperback - Sep 04 2022

web select the department you want to search in
die kleinburger drama in vier aufzugen zuzutop com - Sep 23 2021

die kleinbürger drama in vier aufzügen google books - Aug 15 2023
web maxim gorki die kleinbürger drama in vier aufzügen erstdruck sankt petersburger verlagsgesellschaft 1902 hier in der Übersetzung von august scholz berlin 1902
die kleinbürger drama in vier aufzügen paperback - Oct 05 2022
web mar 29 2017 maxim gorki die kleinbürger drama in vier aufzügen erstdruck sankt petersburger verlagsgesellschaft 1902 hier in der
die kleinburger drama in vier aufzugen by maxim gorky - Jul 14 2023
web read 23 reviews from the world s largest community for readers maxim gorki die kleinburger drama in vier aufzugen edition holzinger taschenbuch berli
die kleinbürger drama in vier aufzügen amazon ca - Mar 30 2022
web buy die kleinbürger drama in vier aufzügen online on amazon eg at best prices fast and free shipping free returns cash on delivery available on eligible purchase
die kleinbürger drama in vier aufzügen paperback amazon - Dec 27 2021
web jan 6 2023 fifty years of german drama a bibliography of modern german drama 1880 1930 based on the loewenberg collection in the johns hopkins university library
die kleinbürger drama in vier aufzügen paperback amazon co uk - Jan 08 2023
web buy die kleinbürger drama in vier aufzügen by gorki maxim scholz august from amazon s fiction books store everyday low prices on a huge range of new releases and classic fiction
die kleinburger drama in vier aufzugen download only - Oct 25 2021
web each success next door to the message as skillfully as insight of this die kleinburger drama in vier aufzugen can be taken as skillfully as picked to act wasserburger
die kleinburger drama in vier aufzugen horst denkler copy - Nov 25 2021
web die kleinburger drama in vier aufzugen 3 3 arranged chronologically by date of construction the book offers a sequential overview of the city s architectural history and
die kleinburger drama in vier aufzugen by maxim gorki alibris - Mar 10 2023
web buy die kleinburger drama in vier aufzugen by maxim gorki online at alibris we have new and used copies available in 3 editions starting at 7 16 shop now

numerical analysis and modelling of the effectiveness of micro wind - Oct 09 2022
web oct 10 2023 thus this article proposed a solution to this problem by installing micro wind turbines mwts on evs as a range extender the turbines will generate electricity by converting the kinetic energy of the air flowing through the mwt into mechanical energy which can have a reasonable effect on the vehicle aerodynamics
full article aerodynamic performance enhancement and - Feb 13 2023
web usually symmetrical naca series airfoils are used for vawt blade design however in the modern aerodynamics of wind turbines some enhanced airfoils become preferable for example the aerodynamic performance of vawt can be improved by using readymade airfoils such as nlf and hybrid nlf naca 4 series for blade design tjiu et al citation
effect of wind turbine designed for electric vehicles on aerodynamics - May 16 2023
web effect of the designed wind turbine on the vehicle traveling 100 km at a constant speed of 27 m s was investigated in this context three different vehicle models have been created
wind turbine aerodynamics and flow control intechopen - Aug 07 2022
web may 22 2022 the chapter gives a preface to the concept of aerodynamics and explains wind turbine terminologies to briefly explain the design and analysis of turbines to form a formidable and appealing pre requisite for researchers to begin their work on
vertical axis wind turbine aerodynamics springerlink - Apr 03 2022
web aug 5 2022 vertical axis wind turbine aerodynamics delphine de tavernier carlos ferreira anders goude reference work entry first online 05 august 2022 2231 accesses 1 altmetric abstract horizontal axis wind turbines hawts are widely studied and have proven their technological capabilities
pdf the aerodynamics of wind turbines researchgate - Apr 15 2023
web jan 1 2013 the aerodynamics of wind t urbines is put on the interference between wind turbines in park situations the near well as for wind turbines located in complex terrain and for clusters of wind
aerodynamics of wind turbines wind energy explained wiley - Jul 06 2022
web dec 18 2009 one dimensional momentum theory and the betz limit ideal horizontal axis wind turbine with wake rotation airfoils and general concepts of aerodynamics blade design for modern wind turbines momentum theory and blade element theory blade shape for ideal rotor without wake rotation
aerodynamic investigation of the start up process of h type - Mar 14 2023
web sep 1 2020 aerodynamics of the start up process of the h type vawt are investigated using the dynamic start up model in the critical region tsr 1 the contribution of lift and drag to the turbine torque generations is investigated
towards a standard approach for future vertical axis wind turbine - Jun 05 2022

web sep 1 2021 the development of vertical axis wind turbines vawts has continued for nearly half a century without agreement on a valid procedure for the design and testing of turbines and it is clear that this has had an impact on the ability to bring a vawt to commercial success

effect of wind turbine designed for electric vehicles on aerodynamics - Sep 20 2023

web jan 1 2022 pdf effect of wind turbine designed for electric vehicles on aerodynamics and energy performance of the vehicle pdf this study aims to generate independently from the electric

aerodynamics of wind turbines a physical basis for analysis - Feb 01 2022

web aerodynamics of wind turbines is a comprehensive introduction to the aerodynamics scaled design and analysis and optimization of horizontal axis wind turbines the author a noted expert on the topic reviews the fundamentals and basic physics of wind turbines operating in the atmospheric boundary layer

vertical axis wind turbine aerodynamics summary and review - Jan 12 2023

web feb 18 2019 turbine aerodynamics axial flow and radial flow turbine design and analysis momentum models or streamtube models represent one of the fundamental approaches in modeling the aerodynamics of straight bladed vertical axis wind turbine sb vawt of darrieus type

wind turbine aerodynamics wikipedia - May 04 2022

web the magnitude and distribution of this force is the primary focus of wind turbine aerodynamics the most familiar type of aerodynamic force is drag the direction of the drag force is parallel to the relative wind typically the wind turbine parts are moving altering the flow around the part

aerodynamics of wind turbines intechopen - Jul 18 2023

web aerodynamics of wind turbines emrah kulunk new mexico institute of mining and technology usa a wind turbine is a device that extracts kinetic energy from the wind and converts it into mechanical energy therefore wind turbine power production depends on the interaction between the rotor and the wind

handbook of wind energy aerodynamics springerlink - Nov 10 2022

web bernhard stoevesandt gerard schepers peter fuglsang sun yuping thoroughly examines the measurement modeling and design of wind turbine aerodynamics includes outlooks on the promising topics for future research contains contributions of internationally renowned experts 8074 accesses 28 citations

pdf aerodynamic analysis of an electric vehicle - Aug 19 2023

web jul 10 2019 vehicle mounted wind turbine vmwt is a mounted horizontal axis wind turbine system for vehicles this paper presents design and implementation of vmwt to generate electricity from

effect of wind turbine designed for electric vehicles on aerodynamics - Jun 17 2023

web effect of wind turbine designed for electric vehicles on aerodynamics and energy performance of the vehicle thermal science 26 4 pp 2907 2917 doi org 10 2298 tsci2204907e Özet

editorial aerodynamic upgrades of wind turbines and wind farms - Dec 11 2022

web wind turbines are a practical way to capture and convert the kinetic energy of the 9 atmospheric air to either mechanic or consequently electrical energy according to ewea european wind energy association wind power is the generating technology with the highest rate for 11 new installations since 2014

aerodynamics of wind turbines third edition researchgate - Sep 08 2022

web may 1 2015 abstract aerodynamics of wind turbines is the established essential text for the fundamental solutions to efficient wind turbine design now in its third edition it has been substantially

the power of aerodynamics lessons from wind turbines and formula 1 cars - Mar 02 2022

web wind turbines convert wind energy into electricity and aerodynamics is a critical aspect of their design this section will discuss the design of wind turbine blades including their shape and material and the importance of blade angle and pitch control in

amazon com customer reviews paris en 1001 photos ned - Jun 05 2023

web find helpful customer reviews and review ratings for paris en 1001 photos ned at amazon com read honest and unbiased product reviews from our users

paris en 1001 photos ne stage gapinc - Dec 19 2021

web paris en 1001 photos ne 3 3 100 renewable energy by 2050 globally and across ten geographical regions based on state of the art scenario modelling it provides the vital missing link between renewable energy targets and the measures needed to achieve them bringing together the latest research in climate science

paris en 1001 photos ne pdf wrbb neu - Feb 18 2022

web award winning writing and photography covering everything from politics and food to theater and fashion the magazine s consistent mission has been to reflect back to its audience the energy and excitement of the city itself while celebrating new york as both a place and an idea 1001 photographs you must see in your lifetime springer

paris en 1001 photos hardcover 7 may 2008 amazon co uk - Apr 03 2023

web may 7 2008 buy paris en 1001 photos by collectif isbn 9782263046346 from amazon s book store everyday low prices and free delivery on eligible orders

paris en 1001 photos by various goodreads - Aug 07 2023

web jan 1 2008 le paris éternel le paris lumière le paris insolite le paris nature le paris créatif et moderne c est une capitale aux multiples facettes que l on vous propose de découvrir dans cet ouvrage illustré par 1001 photos

paris en 1001 photos ned collectif 9782263055713 - Jul 06 2023
web oct 6 2011 paris en 1001 photos ned collectif on amazon com free shipping on qualifying offers paris en 1001 photos ned

paris en 1001 photos ned hardcover 6 october 2011 - Nov 29 2022
web amazon in buy paris en 1001 photos ned book online at best prices in india on amazon in read paris en 1001 photos ned book reviews author details and more at amazon in free delivery on qualified orders

paris en 1001 photos corinne targat 9782263046346 abebooks - Dec 31 2022
web paris en 1001 photos by corinne targat isbn 10 2263046348 isbn 13 9782263046346 solar 2008 hardcover

paris en 1001 photos ned hardcover 6 oct 2011 - Sep 08 2023
web buy paris en 1001 photos ned by collectif isbn 9782263055713 from amazon s book store everyday low prices and free delivery on eligible orders

paris en 1001 photos ne pdf uniport edu - Jun 24 2022
web sep 4 2023 paris en 1001 photos ne is available in our digital library an online access to it is set as public so you can get it instantly our books collection saves in multiple countries allowing you to get the most

paris 1001 photos ne indigo - Oct 29 2022
web paris 1001 photos ne brand null sub brand null type null life stage null appropriate for ages null gender null shipping dimensions 6 h x 6 w x 1 l size null size null color null colour family null style null languages french microwave safe null genre null dishwasher safe null assembly required null

paris en 1001 photos ne copy wrbb neu - Apr 22 2022
web the paris en 1001 photos ne it is entirely easy then in the past currently we extend the belong to to buy and create bargains to download and install paris en 1001 photos ne consequently simple paris en 1001 photos ne 2019 08 17 devyn murray national agricultural library catalog 1966 1970 names digicat the gypsy street dancer

paris photos download the best free paris stock photos - Mar 02 2023
web weekend in paris 49 previous123456next download and use 3 000 paris stock photos for free thousands of new images every day completely free to use high quality videos and images from pexels

19 stunning photos of paris travel leisure - Feb 01 2023
web nov 30 2022 the city of light is the main stage of beloved screenplays for a reason france s capital is more than 2 000 years old and you can feel every bit of that history while walking down its

paris en 1001 photos ne wrbb neu edu - Nov 17 2021
web supplement u of nebraska press a beautifully illustrated instant guide to 1 001 dream symbols organised by theme and

fully indexed and cross referenced catalogue of official a e f photographs taken by the signal corps u s a watkins publishing includes entries for maps and atlases paris baby new york review of books

paris en 1001 photos ne download only - Mar 22 2022

web paris en 1001 photos ne yeah reviewing a books paris en 1001 photos ne could go to your close connections listings this is just one of the solutions for you to be successful neighboring to the statement as competently as acuteness of this paris en 1001 photos ne can be taken as skillfully as picked to act reading in the mobile era

6 558 beautiful photo results pixabay - Sep 27 2022

web 6 558 free paris photos free paris images to use in your next project browse amazing images uploaded by the pixabay community royalty free photos 1 100 of 6 558 photos

paris en 1001 photos ne copy help environment harvard edu - May 24 2022

web paris en 1001 photos ne department of state news letter mar 09 2020 the lake the river the other lake oct 16 2020 the resort town of weneshkeen nestled along michigan s gold coast has become a complex melting pot townies and old timers mix with ritzy summer folk migrant cherry pickers wily river guides and a few ojibwe indians

paris en 1001 photos ne copy lfe - Aug 27 2022

web book flip through asmr the sea 1001 photos robert doisneau paris photo book robert doisneau book timeless 35mm street portraits paris 1912 1994 shortlist photobook of the year 2022 paris photo aperture photobook awards

amazon fr paris en 1001 photos ne collectif livres - Oct 09 2023

web le paris éternel le paris lumière le paris insolite le paris nature le paris créatif et moderne c est une capitale aux multiples facettes que l on vous propose de découvrir dans cet ouvrage illustré par 1001 photos

paris en 1001 photos ned targat corinne amazon de books - May 04 2023

web select the department you want to search in

paris en 1001 photos ne amoa arthouse org - Jul 26 2022

web paris en 1001 photos ne 3 3 today s student in mind this landmark encyclopedia covers the entire scope of the second world war from its earliest roots to its continuing impact on global politics and human society over 1 000 illustrations maps and primary source materials enhance the text and make history come alive for students and faculty

paris en 1001 photos ne pdf uniport edu - Jan 20 2022

web paris en 1001 photos ne 1 1 downloaded from uniport edu ng on august 19 2023 by guest paris en 1001 photos ne eventually you will very discover a further experience and achievement by spending more cash nevertheless when complete you resign yourself to that you require to acquire those all needs with having significantly cash why dont you