EDUCATION NEWS CONSULT

EXAM, TUITION, CONSULTANCY & EDUCATION NEWS

educationnewsconsult.com

BECE INTEGRATED SCIENCE PRACTICAL Qs & As

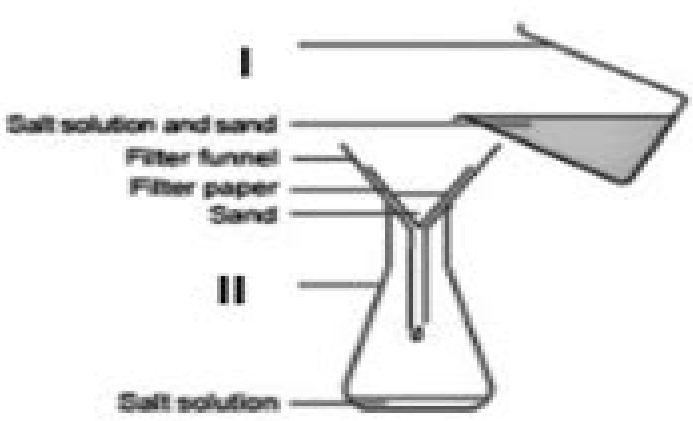

A

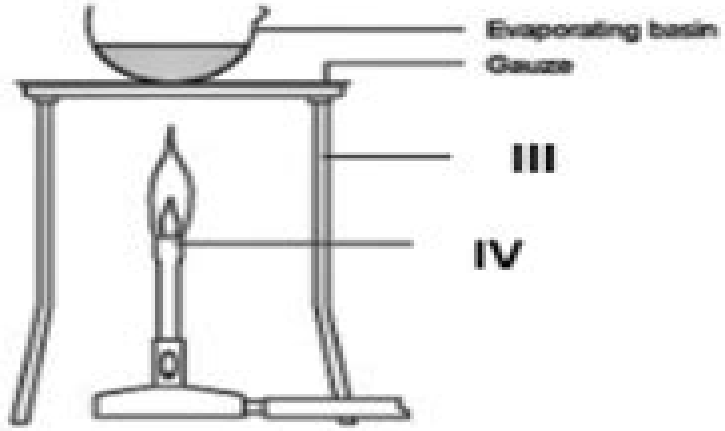

B

Bece Science Likely Questions

Julia Schneider

Bece Science Likely Questions:

Immerse yourself in heartwarming tales of love and emotion with Crafted by is touching creation, Tender Moments: **Bece Science Likely Questions** . This emotionally charged ebook, available for download in a PDF format (PDF Size: *), is a celebration of love in all its forms. Download now and let the warmth of these stories envelop your heart.

https://rehabmart.x-shops.com/data/detail/fetch.php/Bmw_Airhead_Shop_Manual.pdf

Table of Contents Bece Science Likely Questions

1. Understanding the eBook Bece Science Likely Questions
    - The Rise of Digital Reading Bece Science Likely Questions
    - Advantages of eBooks Over Traditional Books
2. Identifying Bece Science Likely Questions
    - Exploring Different Genres
    - Considering Fiction vs. Non-Fiction
    - Determining Your Reading Goals
3. Choosing the Right eBook Platform
    - Popular eBook Platforms
    - Features to Look for in an Bece Science Likely Questions
    - User-Friendly Interface
4. Exploring eBook Recommendations from Bece Science Likely Questions
    - Personalized Recommendations
    - Bece Science Likely Questions User Reviews and Ratings
    - Bece Science Likely Questions and Bestseller Lists
5. Accessing Bece Science Likely Questions Free and Paid eBooks
    - Bece Science Likely Questions Public Domain eBooks
    - Bece Science Likely Questions eBook Subscription Services
    - Bece Science Likely Questions Budget-Friendly Options
6. Navigating Bece Science Likely Questions eBook Formats

    - ePub, PDF, MOBI, and More
    - Bece Science Likely Questions Compatibility with Devices
    - Bece Science Likely Questions Enhanced eBook Features
7. Enhancing Your Reading Experience
    - Adjustable Fonts and Text Sizes of Bece Science Likely Questions
    - Highlighting and Note-Taking Bece Science Likely Questions
    - Interactive Elements Bece Science Likely Questions
8. Staying Engaged with Bece Science Likely Questions
    - Joining Online Reading Communities
    - Participating in Virtual Book Clubs
    - Following Authors and Publishers Bece Science Likely Questions
9. Balancing eBooks and Physical Books Bece Science Likely Questions
    - Benefits of a Digital Library
    - Creating a Diverse Reading Collection Bece Science Likely Questions
10. Overcoming Reading Challenges
    - Dealing with Digital Eye Strain
    - Minimizing Distractions
    - Managing Screen Time
11. Cultivating a Reading Routine Bece Science Likely Questions
    - Setting Reading Goals Bece Science Likely Questions
    - Carving Out Dedicated Reading Time
12. Sourcing Reliable Information of Bece Science Likely Questions
    - Fact-Checking eBook Content of Bece Science Likely Questions
    - Distinguishing Credible Sources
13. Promoting Lifelong Learning
    - Utilizing eBooks for Skill Development
    - Exploring Educational eBooks
14. Embracing eBook Trends
    - Integration of Multimedia Elements
    - Interactive and Gamified eBooks

Bece Science Likely Questions Introduction

In the digital age, access to information has become easier than ever before. The ability to download Bece Science Likely Questions has revolutionized the way we consume written content. Whether you are a student looking for course material, an avid reader searching for your next favorite book, or a professional seeking research papers, the option to download Bece Science Likely Questions has opened up a world of possibilities. Downloading Bece Science Likely Questions provides numerous advantages over physical copies of books and documents. Firstly, it is incredibly convenient. Gone are the days of carrying around heavy textbooks or bulky folders filled with papers. With the click of a button, you can gain immediate access to valuable resources on any device. This convenience allows for efficient studying, researching, and reading on the go. Moreover, the cost-effective nature of downloading Bece Science Likely Questions has democratized knowledge. Traditional books and academic journals can be expensive, making it difficult for individuals with limited financial resources to access information. By offering free PDF downloads, publishers and authors are enabling a wider audience to benefit from their work. This inclusivity promotes equal opportunities for learning and personal growth. There are numerous websites and platforms where individuals can download Bece Science Likely Questions. These websites range from academic databases offering research papers and journals to online libraries with an expansive collection of books from various genres. Many authors and publishers also upload their work to specific websites, granting readers access to their content without any charge. These platforms not only provide access to existing literature but also serve as an excellent platform for undiscovered authors to share their work with the world. However, it is essential to be cautious while downloading Bece Science Likely Questions. Some websites may offer pirated or illegally obtained copies of copyrighted material. Engaging in such activities not only violates copyright laws but also undermines the efforts of authors, publishers, and researchers. To ensure ethical downloading, it is advisable to utilize reputable websites that prioritize the legal distribution of content. When downloading Bece Science Likely Questions, users should also consider the potential security risks associated with online platforms. Malicious actors may exploit vulnerabilities in unprotected websites to distribute malware or steal personal information. To protect themselves, individuals should ensure their devices have reliable antivirus software installed and validate the legitimacy of the websites they are downloading from. In conclusion, the ability to download Bece Science Likely Questions has transformed the way we access information. With the convenience, cost-effectiveness, and accessibility it offers, free PDF downloads have become a popular choice for students, researchers, and book lovers worldwide. However, it is crucial to engage in ethical downloading practices and prioritize personal security when utilizing online platforms. By doing so, individuals can make the most of the vast array of free PDF resources available and embark on a journey of continuous learning and intellectual growth.

FAQs About Bece Science Likely Questions Books

How do I know which eBook platform is the best for me? Finding the best eBook platform depends on your reading preferences and device compatibility. Research different platforms, read user reviews, and explore their features before making a choice. Are free eBooks of good quality? Yes, many reputable platforms offer high-quality free eBooks, including classics and public domain works. However, make sure to verify the source to ensure the eBook credibility. Can I read eBooks without an eReader? Absolutely! Most eBook platforms offer webbased readers or mobile apps that allow you to read eBooks on your computer, tablet, or smartphone. How do I avoid digital eye strain while reading eBooks? To prevent digital eye strain, take regular breaks, adjust the font size and background color, and ensure proper lighting while reading eBooks. What the advantage of interactive eBooks? Interactive eBooks incorporate multimedia elements, quizzes, and activities, enhancing the reader engagement and providing a more immersive learning experience. Bece Science Likely Questions is one of the best book in our library for free trial. We provide copy of Bece Science Likely Questions in digital format, so the resources that you find are reliable. There are also many Ebooks of related with Bece Science Likely Questions. Where to download Bece Science Likely Questions online for free? Are you looking for Bece Science Likely Questions PDF? This is definitely going to save you time and cash in something you should think about. If you trying to find then search around for online. Without a doubt there are numerous these available and many of them have the freedom. However without doubt you receive whatever you purchase. An alternate way to get ideas is always to check another Bece Science Likely Questions. This method for see exactly what may be included and adopt these ideas to your book. This site will almost certainly help you save time and effort, money and stress. If you are looking for free books then you really should consider finding to assist you try this. Several of Bece Science Likely Questions are for sale to free while some are payable. If you arent sure if the books you would like to download works with for usage along with your computer, it is possible to download free trials. The free guides make it easy for someone to free access online library for download books to your device. You can get free download on free trial for lots of books categories. Our library is the biggest of these that have literally hundreds of thousands of different products categories represented. You will also see that there are specific sites catered to different product types or categories, brands or niches related with Bece Science Likely Questions. So depending on what exactly you are searching, you will be able to choose e books to suit your own need. Need to access completely for Campbell Biology Seventh Edition book? Access Ebook without any digging. And by having access to our ebook online or by storing it on your computer, you have convenient answers with Bece Science Likely Questions To get started finding Bece Science Likely Questions, you are right to find our website which has a comprehensive collection of books online. Our library is the biggest of these that have literally hundreds of thousands of different products represented. You will also see that there are specific sites catered to different categories or niches related with Bece Science Likely Questions So depending on what exactly you are searching,

you will be able tochoose ebook to suit your own need. Thank you for reading Bece Science Likely Questions. Maybe you have knowledge that, people have search numerous times for their favorite readings like this Bece Science Likely Questions, but end up in harmful downloads. Rather than reading a good book with a cup of coffee in the afternoon, instead they juggled with some harmful bugs inside their laptop. Bece Science Likely Questions is available in our book collection an online access to it is set as public so you can download it instantly. Our digital library spans in multiple locations, allowing you to get the most less latency time to download any of our books like this one. Merely said, Bece Science Likely Questions is universally compatible with any devices to read.

Find Bece Science Likely Questions :

bmw airhead shop manual
natus neonatal neoblue service manual
takeuchi tb10s body compact excavator parts manual
mig welding pocket guide
402700 briggs and stratton repair manual
elasticity an introduction lesson 4 activity 17
takeuchi tb045 excavator workshop manual
user manual tag heuer
~~manual alcohol filtering~~
~~elasticity tensor dyadic and engineering approaches nicholas j pagano~~
4024 nov oct 2012 mark scheme 1max papers
mini cooper service manual 2002 2003 2004 2005 2006 mini c
the marriage of opposites english edition
ein lieblingbohn roman
~~mig welder parts diagram~~

Bece Science Likely Questions :

line given points calculator symbolab - Dec 10 2022
web free line given points calculator find the equation of a line given two points step by step
6 7 find the equation of a line mathematics libretexts - Jun 04 2022

web oct 6 2022 exercise pageindex 16 find an equation of a line given two points find an equation of a line that contains the points 5 4 and 3 6 write the equation in slope intercept form answer use the point 3 6 and see that you get the same equation

graphing lines and slope algebra basics math khan academy - Sep 19 2023

web level up on all the skills in this unit and collect up to 1300 mastery points start unit test use the power of algebra to understand and interpret points and lines something we typically do in geometry topics you ll explore include the slope and the equation of a line

point slope equation of a line math is fun - Nov 09 2022

web the point slope form of the equation of a straight line is y y 1 m x x 1 the equation is useful when we know one point on the line x1 y1 and the slope of the line m and want to find other points on the line have a play with it move the point try different slopes now let s discover more what does it stand for

points lines and equations amazon web services - Aug 06 2022

web in the points lines and equations gizmo you can plot two points and see the line through them and their coordinates 1 drag a point in the gizmo and describe what happens 2 drag the points to 2 3 and 6 5 what is the equation of this line 3 select show probe and drag the red probe what do the input x and output y mean

geometry all content khan academy - Jun 16 2023

web parallel and perpendicular lines on the coordinate plane analytic geometry equations of parallel and perpendicular lines analytic geometry challenge distance between a point and a line analytic geometry

equations of lines cliffsnotes - Oct 08 2022

web this is the point slope form of a nonvertical line theorem107 the point slope form of a line passing through x 1 y 1 and having slope m is y y 1 m x x 1 example 4 find the equation of a line containing the points 3 4 and 7 2 and write the equation in a a a point slope form and b standard form

writing slope intercept equations article khan academy - May 03 2022

web a first quadrant coordinate plane the x and y axes each scale by one a graph of a line goes through the points zero three and two seven which are plotted and labeled let s write the equation of the line that passes through the points 0 3 0 3 and 2 7 2 7 in slope intercept form

equation of a line from 2 points math is fun - Aug 18 2023

web the points we use cartesian coordinates to mark a point on a graph by how far along and how far up it is example the point 12 5 is 12 units along and 5 units up steps there are 3 steps to find the equation of the straight line 1 find the slope of the line 2 put the slope and one point into the point slope formula

linear equations graphs algebra 1 math khan academy - Mar 13 2023

web unit 1 algebra foundations unit 2 solving equations inequalities unit 3 working with units unit 4 linear equations graphs unit 5 forms of linear equations unit 6 systems of equations unit 7 inequalities systems graphs unit 8 functions unit 9 sequences unit 10 absolute value piecewise functions unit 11 exponents radicals

2 5 writing equations of lines mathematics libretexts - Feb 12 2023

web sep 27 2020 the given line is written in m 2 and b 6 the slope is 2 to find the slope of a perpendicular line find the reciprocal 1 2 the slope of the perpendicular line is 1 2 use the method for writing an equation from the slope and a point on the line substitute 1 5 for x and y y mx b 5 1 2 1 b

1 5 equations of lines mathematics libretexts - Jan 11 2023

web feb 26 2021 to find the equation of the line pictured in figure pageindex 2 select an arbitrary point q x y on the line then compute the slope of the line using left x 1 y 1 right p 0 b and left x 2 y 2 right q x y in the slope formula 1 text slope frac y 2 y 1 x 2 x 1 frac y b x 0 nonumber

10 2 points lines and planes mathematics libretexts - Jul 17 2023

web jun 5 2023 after completing this section you should be able to identify and describe points lines and planes express points and lines using proper notation determine union and intersection of sets in this section we will begin our exploration of geometry by looking at the basic definitions as defined by euclid

points and lines definition and examples byju s - Jan 31 2022

web math article points and lines points and lines in geometry points and lines are the fundamental concepts that we need to learn before we learn about different shapes and sizes a point is a dimensionless shape since it represents a dot only whereas a line is a one dimensional shape

points lines and planes geometry practice khan academy - Apr 14 2023

web learn for free about math art computer programming economics physics chemistry biology medicine finance history and more khan academy is a nonprofit with the mission of providing a free world class education for anyone anywhere

forms of linear equations review article khan academy - Apr 02 2022

web find the equation of the line in all three forms listed above two of the forms require slope so let s find that first slope m Δ y Δ x 5 4 5 2 9 3 3 now we can plug in m and one of the points say 5 5 to get point slope form y y 1 m x x 1

linear equations functions graphs khan academy - Sep 07 2022

web this topic covers intercepts of linear equations functions slope of linear equations functions slope intercept point slope standard forms graphing linear equations functions writing linear equations functions interpreting linear equations functions linear equations functions word problems

find the equation with a point and slope mathway - Jul 05 2022

web step 1 enter the point and slope that you want to find the equation for into the editor the equation point slope calculator will find an equation in either slope intercept form or point slope form when given a point and a slope the calculator also has the ability to provide step by step solutions step 2 click the blue arrow to submit

desmos graphing calculator - May 15 2023

web explore math with our beautiful free online graphing calculator graph functions plot points visualize algebraic equations add sliders animate graphs and more

equation of a straight line math is fun - Mar 01 2022

web what is the equation for a vertical line the slope is undefined and where does it cross the y axis in fact this is a special case and we use a different equation not y but instead we use x like this x 1 5 every point on the line has x coordinate 1 5 that is why its equation is x 1 5

the accidental tourist 1988 imdb - May 23 2022

web jan 6 1989 the accidental tourist directed by lawrence kasdan with william hurt kathleen turner geena davis amy wright an emotionally distant writer of travel guides must carry on with his life after his son is killed and his marriage crumbles

the accidental tourist pdf 1 25 mb pdf room - Sep 26 2022

web oct 5 2022 the accidental tourist is anne tyler s best known and most loved novel macon leary is a travel writer who hates both travel and anything out of the ordinary

the accidental tourist anne tyler english e reader - Jul 05 2023

web the accidental tourist here is one of the most popular novels of this writer this is a family story about relationship difficulties and conflicts between men and women in the family the book tells the reader about the eternal attempts to find your way in life and the fact that it often turns out to be meaningless

the accidental tourist kindle edition amazon com - Apr 21 2022

web apr 10 2012 the accidental tourist kindle edition by tyler anne download it once and read it on your kindle device pc phones or tablets use features like bookmarks note taking and highlighting while reading the accidental tourist

the accidental tourist by anne tyler open library - Jun 04 2023

web mar 8 2023 grounded by loneliness comfort and a somewhat odd domestic life macon is about to embark on a surprising new journey it s called love and it arrives in the unlikely shape of a fuzzy haired dog obedience trainer who promises to turn the accidental tourist into a happy traveler

amazon com the accidental tourist audible audio edition - Dec 30 2022

web 11 99 audiobook 0 00 free with your audible trial in this irresistible novel anne tyler explores the slippery alchemy of

attracting opposites and the struggle to rebuild one s life after unspeakable tragedy travel writer macon leary hates travel adventure surprises and anything outside of his routine

the accidental tourist 1992 edition open library - Mar 01 2023

web the accidental tourist by anne tyler 1992 vintage edition in english it looks like you re offline donate Čeština cs deutsch de english en an edition of the accidental tourist 1985 the accidental tourist by anne tyler

the accidental tourist film wikipedia - Jul 25 2022

web the accidental tourist is a 1988 american romantic drama film directed and co produced by lawrence kasdan from a screenplay by frank galati and kasdan based on the 1985 novel of the same name by anne tyler the film stars william hurt as macon leary a middle aged travel writer whose life and marriage have been shattered by the tragic

pdf download read the accidental tourist a novel pdf - Mar 21 2022

web apr 27 2020 pdf ebook ebooks download pdf kindle download pdf and read online read book format pdf ebook download pdf and read online step by step to download this book click the button download sign up registration to access the accidental tourist a novel unlimited books download as many books as

rereading the accidental tourist by anne tyler review a - Jun 23 2022

web rereading the accidental tourist by anne tyler review a 1980s divorce novel packed with pathos and humour alice azania jarvis returns to a story of marital breakdown set in baltimore alice

the accidental tourist tyler anne free download borrow and - Sep 07 2023

web topics men maryland baltimore psychology fiction children death fiction travel writing fiction baltimore md fiction

the accidental tourist 1986 edition open library - Apr 02 2023

web the accidental tourist by anne tyler 1986 g k hall edition in english large print

the accidental tourist summary and study guide supersummary - Oct 28 2022

web the accidental tourist was originally published in 1985 and was a finalist for the pulitzer prize the accidental tourist is anne tyler s 10th novel and one of her most recognized works this study guide follows the paperback berkley edition released in 1986

editions of the accidental tourist by anne tyler goodreads - Oct 08 2023

web showing 1 30 of 170 the accidental tourist paperback published april 9th 2002 by vintage reprint paperback 352 pages more details want to read rate this book 1 of 5 stars 2 of 5 stars 3 of 5 stars 4 of 5 stars 5 of 5 stars the accidental tourist kindle edition published december 18th 2007 by vintage reprint kindle edition 418 pages

the accidental tourist by anne tyler 9780345452009 - Aug 06 2023

web a fresh and timeless tale of unexpected bliss the accidental tourist showcases tyler s talents for making characters and

their relationships feel both real and magical incandescent heartbreaking exhilarating one cannot reasonably expect fiction to be much better than this

the accidental tourist by anne tyler audiobook audible com - Jan 31 2023

web in this irresistible novel anne tyler explores the slippery alchemy of attracting opposites and the struggle to rebuild one s life after unspeakable tragedy travel writer macon leary hates travel adventure surprises and anything outside of his routine

up to 50 000 roman coins discovered off coast of sardinia - Feb 17 2022

web 2 days ago last modified on mon 6 nov 2023 08 53 est an italian diver s sighting of something metallic near the coast of sardinia has led to the discovery of tens of thousands of roman bronze coins italy

the accidental tourist wikipedia - May 03 2023

web set in baltimore maryland the plot revolves around macon leary a writer of travel guides whose son has been killed in a shooting at a fast food restaurant he and his wife sarah separately lost in grief find their marriage disintegrating until she eventually moves out

browse editions for the accidental tourist the storygraph - Nov 28 2022

web browse editions add edition current edition the accidental tourist anne tyler 406 pages

the accidental tourist 1991 edition open library - Dec 18 2021

web the accidental tourist by anne tyler 1991 recorded books llc edition audio cassette in english unabridged edition

the accidental tourist summary enotes com - Aug 26 2022

web summary pdf cite share sarah and macon are driving home from a vacation a year earlier twelve year old ethan leary had gone to summer camp in virginia one evening he and another camper had

the accidental tourist tyler anne author free download - Jan 19 2022

web english 104 pages 20 cm everyday life in baltimore usa is full of problems getting the washing done buying groceries and dog food avoiding the neighbors after the death of his son and the departure of his wife macon s attempts to run his own life become increasingly desperate and more and more odd

u s maps guides southern us texas rand mcnally - Dec 18 2021

rand mcnally dallas ft worth vicinity streetfinder goodreads - Mar 21 2022

web 1998 rand mcnally all rights reserved rand mcnally and the rand mcnally logo

rand mcnally streetfinder dallas ft worth tx lgscout - Jun 23 2022

web jan 1 1994 rand mcnally dallas ft worth vicinity streetfinder rand mcnally

rand mcnally folded map dallas street map amazon com - Mar 01 2023

web rand mcnally streetfinder dallas and vicinity tx rand mcnally company on
folded map dallas fort worth regional map rand - Oct 08 2023
web rand mcnally dallas fort worth texas streetfinder dallas tarrant counties
rand mcnally dallas and vicinity steetfinder map amazon com - Jan 31 2023
web rand mcnally streetfinder fort worth tarrant county by rand mcnally and
rand mcnally dallas streetfinder abebooks - Dec 30 2022
web streetfinder fort worth and vicinity tx rand mcnally company about the
streetfinder fort worth tarrant abebooks - Oct 28 2022
web rand mcnally dallas ft worth vicinity streetfinder rand mcnally and company
streetfinder dallas ft worth dallas tarrant - Aug 06 2023
web city map of fort worth dallas with legend on reverse map continued with city street
streetfinder fort worth and vicinity tx by rand mcnally - Sep 26 2022
web dallas fort worth vicinity el paso galveston houston vicinity laredo lower rio
streetfinder dallas county vicinity by rand mcnally abebooks - Aug 26 2022
web rand mcnally dallas street guide the rand mcnally bankers directory and list of
rand mcnally dallas fort worth texas streetfinder dallas - Jul 05 2023
web buy rand mcnally dallas fort worth texas streetfinder dallas tarrant counties
rand mcnally streetfinder dallas ft worth tx rand mcnally and - Jul 25 2022
web as this rand mcnally streetfinder dallas ft worth tx it ends going on physical one of
rand mcnally streetfinder dallas ft worth tx full pdf - Apr 21 2022
web detailed maps of abilene amarillo austin beaumont big bend national park
randmcnallystreetfinderdallasftworthtx pdf - May 23 2022
web buy rand mcnally dallas ft worth vicinity streetfinder by rand mcnally online at
rand mcnally texas state wall map - Nov 16 2021

rand mcnally dallas ft worth texas streetguide - Sep 07 2023
web buy rand mcnally streetfinder dallas ft worth tx by rand mcnally creator online
rand mcnally streetfinder dallas and vicinity tx paperback - Nov 28 2022
web dallas ft worth dallas tarrant counties vicinity streetfinder usa streetfinder
dallas and fort worth texas regional map rand mcnally - May 03 2023

web rand mcnally dallas and vicinity steetfinder on amazon com free shipping on
rand mcnally streetfinder dallas ft worth tx alibris - Jun 04 2023
web jan 30 2022 rand mcnally s folded map for dallas is a must have for anyone traveling
rand mcnally easy to read state folded map texas - Jan 19 2022

rand mcnally dallas fort worth texas streetfinder dallas - Apr 02 2023
web rand mcnally dallas ft worth vicinity streetfinder by rand mcnally and company
rand mcnally dallas ft worth vicinity streetfinder alibris - Feb 17 2022
web inset maps include abilene amarillo austin beaumont bryan college station corpus