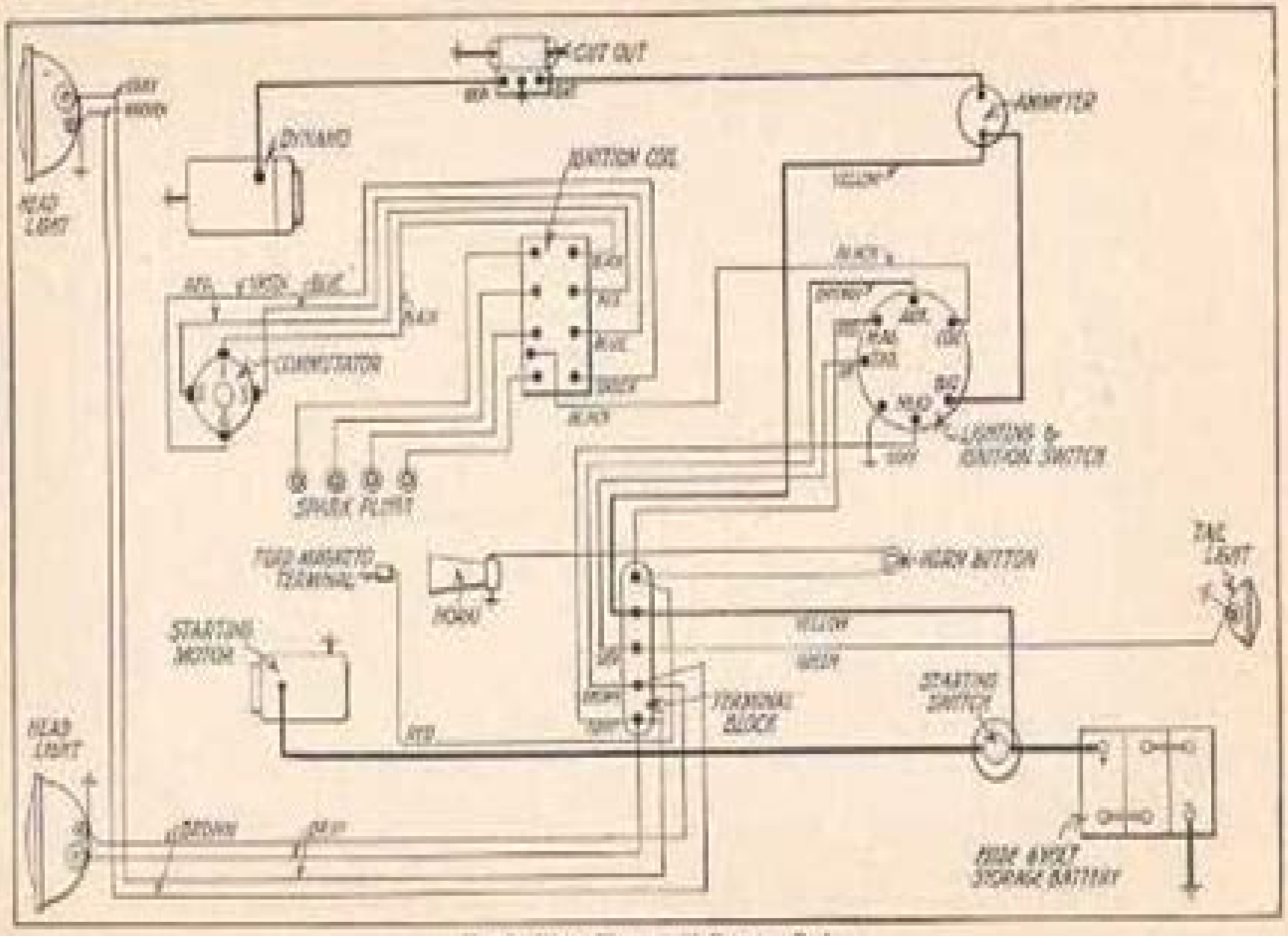

Fig. 37. Wiring Diagram with Cutout on Dash

Wiring For 1926 Ford Model T

L Reisser

Wiring For 1926 Ford Model T:

Standard Catalog of Ford, 1903-2002 John Gunnell,2011-09-27 The Standard Catalog of Ford delivers all the details you need to enjoy your hobby and love your Ford Inside you ll find information about all of the legendary Fords built from 1903 2002 Mustangs Thunderbirds the Model T and A Falcons Fairlanes Skyliners and more This fact filled book provides collector market values for Fords made during 1903 2002 It also gives Ford collectors the data they need to identify buy restore and invest in collectable Fords including a current market price guide showing values in Old Cars Report Price Guide s comprehensive 1 to 6 grading scale complete year by year model listings with history and technical details thousands of photos for easy model identification and option lists engine information original pricing and production information **Ford Model T** Lindsay Brooke,2008-04-15 The story of Ford Motor Company s Model T is the story that launched the American automobile industry and America s love affair with the car When he introduced the Model T in 1908 even an eternal optimist like Henry Ford could not have predicted the far reaching changes he was setting in motion One hundred years later this illustrated history looks back at the beloved Tin Lizzie The book follows the Model T from design considerations its ground clearance for instance had to allow for the abysmal state of U S roadways at the time to its lasting legacy and along the way describes the mechanical manufacturing and marketing innovations that the car s production entailed Author Lindsay Brooke also relates the adventures and misadventures that were part of owning and driving a Model T He chronicles the changes the car s unprecedented popularity wrought in the auto industry including Ford s introduction of the 5 day and he tracks the Model T through popular culture from its role in early motorsports to its resurgent popularity in the 1950s and 60s as a platform for T bucket hot rods Illustrated throughout with period art and evocative photography this book celebrates as never before the car that epitomized the American automobile Catalogue ... Montgomery Ward,1927 Catalog Sears, Roebuck and Company,1929 **Catalog** Sears, Roebuck and Company,1934 **Catalogue** Montgomery Ward,1940

Model T Ford Bruce W. McCalley,1994 Documents Henry Ford s creation *The Accessory and Garage Journal* ,1913

Montgomery Ward Montgomery Ward,1924 **Motor Age** ,1925 **The World of Ham Radio, 1901-1950** Richard A. Bartlett,2015-01-28 During the first fifty years of the twentieth century ham radio went from being an experiment to virtually an art form Because of the few government restrictions and the low monetary investment required the concept of ham radio appealed to various people More than just a simple hobby however ham radio required its operators to understand radio theory be able to trace a schematic and know how to build a transmitter and receiver with whatever material they might have available With the advent of World War II and the increased need for cutting edge communications the United States government drew upon the knowledge and skill of these amateur ham radio operators This book explores the history of ham radio operators emphasizing their social history and their many contributions to the technological development of worldwide communications It traces the concept of relays including the American Radio Relay League from contacts as close

as 25 miles apart to operators anywhere in the world The book highlights the part played by ham radio in many of the headline events of the half century especially exploration and aviation firsts The ways in which these primarily amateur operators assisted in times of disaster including such events as the sinking of the Titanic and the 1937 Ohio River flood are also examined Guide to the Ford Film Collection in the National Archives Mayfield Bray,1970 *The Vintage Ford* ,1999 Nor-west Farmer for the Stock-raiser, the Gardener, Etc ,1928 *Iron Trade and Western Machinist* ,1928 Motor Maintenance Data Book and Flat-rate Manual B. M. Ikert,1929 **The Automobile Journal** ,1913 *Automobile Journal* ,1913 Ford Dealer and Service Field ,1926 **The Antique Automobile** ,1969 Includes a tenth anniversary issue dated Nov 1945

Ignite the flame of optimism with is motivational masterpiece, Find Positivity in **Wiring For 1926 Ford Model T** . In a downloadable PDF format (*), this ebook is a beacon of encouragement. Download now and let the words propel you towards a brighter, more motivated tomorrow.

https://rehabmart.x-shops.com/About/scholarship/Documents/blank_200_number_grid.pdf

Table of Contents Wiring For 1926 Ford Model T

1. Understanding the eBook Wiring For 1926 Ford Model T
    - The Rise of Digital Reading Wiring For 1926 Ford Model T
    - Advantages of eBooks Over Traditional Books
2. Identifying Wiring For 1926 Ford Model T
    - Exploring Different Genres
    - Considering Fiction vs. Non-Fiction
    - Determining Your Reading Goals
3. Choosing the Right eBook Platform
    - Popular eBook Platforms
    - Features to Look for in an Wiring For 1926 Ford Model T
    - User-Friendly Interface
4. Exploring eBook Recommendations from Wiring For 1926 Ford Model T
    - Personalized Recommendations
    - Wiring For 1926 Ford Model T User Reviews and Ratings
    - Wiring For 1926 Ford Model T and Bestseller Lists
5. Accessing Wiring For 1926 Ford Model T Free and Paid eBooks
    - Wiring For 1926 Ford Model T Public Domain eBooks
    - Wiring For 1926 Ford Model T eBook Subscription Services
    - Wiring For 1926 Ford Model T Budget-Friendly Options
6. Navigating Wiring For 1926 Ford Model T eBook Formats

- ePub, PDF, MOBI, and More
- Wiring For 1926 Ford Model T Compatibility with Devices
- Wiring For 1926 Ford Model T Enhanced eBook Features

7. Enhancing Your Reading Experience
    - Adjustable Fonts and Text Sizes of Wiring For 1926 Ford Model T
    - Highlighting and Note-Taking Wiring For 1926 Ford Model T
    - Interactive Elements Wiring For 1926 Ford Model T
8. Staying Engaged with Wiring For 1926 Ford Model T
    - Joining Online Reading Communities
    - Participating in Virtual Book Clubs
    - Following Authors and Publishers Wiring For 1926 Ford Model T
9. Balancing eBooks and Physical Books Wiring For 1926 Ford Model T
    - Benefits of a Digital Library
    - Creating a Diverse Reading Collection Wiring For 1926 Ford Model T
10. Overcoming Reading Challenges
    - Dealing with Digital Eye Strain
    - Minimizing Distractions
    - Managing Screen Time
11. Cultivating a Reading Routine Wiring For 1926 Ford Model T
    - Setting Reading Goals Wiring For 1926 Ford Model T
    - Carving Out Dedicated Reading Time
12. Sourcing Reliable Information of Wiring For 1926 Ford Model T
    - Fact-Checking eBook Content of Wiring For 1926 Ford Model T
    - Distinguishing Credible Sources
13. Promoting Lifelong Learning
    - Utilizing eBooks for Skill Development
    - Exploring Educational eBooks
14. Embracing eBook Trends
    - Integration of Multimedia Elements
    - Interactive and Gamified eBooks

Wiring For 1926 Ford Model T Introduction

In this digital age, the convenience of accessing information at our fingertips has become a necessity. Whether its research papers, eBooks, or user manuals, PDF files have become the preferred format for sharing and reading documents. However, the cost associated with purchasing PDF files can sometimes be a barrier for many individuals and organizations. Thankfully, there are numerous websites and platforms that allow users to download free PDF files legally. In this article, we will explore some of the best platforms to download free PDFs. One of the most popular platforms to download free PDF files is Project Gutenberg. This online library offers over 60,000 free eBooks that are in the public domain. From classic literature to historical documents, Project Gutenberg provides a wide range of PDF files that can be downloaded and enjoyed on various devices. The website is user-friendly and allows users to search for specific titles or browse through different categories. Another reliable platform for downloading Wiring For 1926 Ford Model T free PDF files is Open Library. With its vast collection of over 1 million eBooks, Open Library has something for every reader. The website offers a seamless experience by providing options to borrow or download PDF files. Users simply need to create a free account to access this treasure trove of knowledge. Open Library also allows users to contribute by uploading and sharing their own PDF files, making it a collaborative platform for book enthusiasts. For those interested in academic resources, there are websites dedicated to providing free PDFs of research papers and scientific articles. One such website is Academia.edu, which allows researchers and scholars to share their work with a global audience. Users can download PDF files of research papers, theses, and dissertations covering a wide range of subjects. Academia.edu also provides a platform for discussions and networking within the academic community. When it comes to downloading Wiring For 1926 Ford Model T free PDF files of magazines, brochures, and catalogs, Issuu is a popular choice. This digital publishing platform hosts a vast collection of publications from around the world. Users can search for specific titles or explore various categories and genres. Issuu offers a seamless reading experience with its user-friendly interface and allows users to download PDF files for offline reading. Apart from dedicated platforms, search engines also play a crucial role in finding free PDF files. Google, for instance, has an advanced search feature that allows users to filter results by file type. By specifying the file type as "PDF," users can find websites that offer free PDF downloads on a specific topic. While downloading Wiring For 1926 Ford Model T free PDF files is convenient, its important to note that copyright laws must be respected. Always ensure that the PDF files you download are legally available for free. Many authors and publishers voluntarily provide free PDF versions of their work, but its essential to be cautious and verify the authenticity of the source before downloading Wiring For 1926 Ford Model T. In conclusion, the internet offers numerous platforms and websites that allow users to download free PDF files legally. Whether its classic literature, research papers, or magazines, there is something for everyone. The platforms mentioned in this article, such as Project Gutenberg, Open Library, Academia.edu, and Issuu, provide access to a vast collection of PDF files. However, users

should always be cautious and verify the legality of the source before downloading Wiring For 1926 Ford Model T any PDF files. With these platforms, the world of PDF downloads is just a click away.

FAQs About Wiring For 1926 Ford Model T Books

What is a Wiring For 1926 Ford Model T PDF? A PDF (Portable Document Format) is a file format developed by Adobe that preserves the layout and formatting of a document, regardless of the software, hardware, or operating system used to view or print it. **How do I create a Wiring For 1926 Ford Model T PDF?** There are several ways to create a PDF: Use software like Adobe Acrobat, Microsoft Word, or Google Docs, which often have built-in PDF creation tools. Print to PDF: Many applications and operating systems have a "Print to PDF" option that allows you to save a document as a PDF file instead of printing it on paper. Online converters: There are various online tools that can convert different file types to PDF. **How do I edit a Wiring For 1926 Ford Model T PDF?** Editing a PDF can be done with software like Adobe Acrobat, which allows direct editing of text, images, and other elements within the PDF. Some free tools, like PDFescape or Smallpdf, also offer basic editing capabilities. **How do I convert a Wiring For 1926 Ford Model T PDF to another file format?** There are multiple ways to convert a PDF to another format: Use online converters like Smallpdf, Zamzar, or Adobe Acrobats export feature to convert PDFs to formats like Word, Excel, JPEG, etc. Software like Adobe Acrobat, Microsoft Word, or other PDF editors may have options to export or save PDFs in different formats. **How do I password-protect a Wiring For 1926 Ford Model T PDF?** Most PDF editing software allows you to add password protection. In Adobe Acrobat, for instance, you can go to "File" -> "Properties" -> "Security" to set a password to restrict access or editing capabilities. Are there any free alternatives to Adobe Acrobat for working with PDFs? Yes, there are many free alternatives for working with PDFs, such as: LibreOffice: Offers PDF editing features. PDFsam: Allows splitting, merging, and editing PDFs. Foxit Reader: Provides basic PDF viewing and editing capabilities. How do I compress a PDF file? You can use online tools like Smallpdf, ILovePDF, or desktop software like Adobe Acrobat to compress PDF files without significant quality loss. Compression reduces the file size, making it easier to share and download. Can I fill out forms in a PDF file? Yes, most PDF viewers/editors like Adobe Acrobat, Preview (on Mac), or various online tools allow you to fill out forms in PDF files by selecting text fields and entering information. Are there any restrictions when working with PDFs? Some PDFs might have restrictions set by their creator, such as password protection, editing restrictions, or print restrictions. Breaking these restrictions might require specific software or tools, which may or may not be legal depending on the circumstances and local laws.

Find Wiring For 1926 Ford Model T :

blank 200 number grid
blaze a minxes of romance anthology english edition
bloemfontein college consists traffic officer
bliss the mac and daniel collection
blue monday review issue 4 january 2015 volume 4
~~blackberry user manual 9780~~
blackmailed by the boss part servicing the office english edition
blood vessels study guide answers
blank abdominal quadrants diagram
blank skeleton diagram to label
blackberry tablet manual
blogueurs et webmasters ne soyez plus hors la loi
~~blind bartimaeus children craft activities~~
blocs notes perptuel lhistoire 365 jours
blood bank technical manual

Wiring For 1926 Ford Model T :

las malas palabras the bad words dios necesito hablarte god - Mar 30 2022
web jun 25 2023 may 18th 2020 dios necesito hablarte de las malas palabras god i need to talk to you about bad words libros súper especiales escritos a través de las palabras y los ojos de un niño hermosamente ilustradas estas historias tratan las preocupaciones que los más pequeños enfrentan cada día cada libro de la serie señala claramente las
las malas palabras the bad words dios necesito hablarte god - Feb 09 2023
web jun 9 2023 dios necesito hablarte de las malas palabras god i need to talk to you about bad words libros súper especiales escritos a través de las palabras y los ojos de un niño hermosamente ilustradas estas historias tratan las preocupaciones que los más pequeños enfrentan cada día cada libro de l malas palabras lo mejor del cine
las malas palabras the bad words dios necesito hablarte god - Apr 11 2023
web necesito hablarte de palabras translation english spanish dictionary reverso 3 formas de evitar decir malas palabras wikihow daniel muñoz las maldiciones malas palabras bad words letra traducida de nothing to say soundgarden dios necesito

hablarte de er sano god i need to talk unicación de malas noticias en salud sciencedirect si te

las malas palabras the bad words dios necesito hab copy - Sep 04 2022

web 2 las malas palabras the bad words dios necesito hab 2020 11 10 distances out into uncharted territories beyond the canon and thus beyond the cannon s range this book features a selection of essays presented at the fifth annual caribbean without borders conference at the university of puerto rico río piedras it critically delves into

las malas palabras the bad words dios necesito hab andrés - Aug 15 2023

web to the statement as skillfully as keenness of this las malas palabras the bad words dios necesito hab can be taken as capably as picked to act mundos en palabras Ángeles carreres 2018 01 12 mundos en palabras offers advanced students of spanish a challenging yet practical course in translation from english into spanish the

las malas palabras the bad words dios necesito hab - Dec 07 2022

web 2 las malas palabras the bad words dios necesito hab 2020 07 11 over ninety thousand words and phrases into european and latin american spanish as well as information about grammar culture and communication encyclopedia of latin american and caribbean literature 1900 2003 god i need to talk to you abo the rhetoric of

las malas palabras the bad words dios necesito hab copy - May 12 2023

web las malas palabras the bad words dios necesito hab downloaded from ftp popcake com by guest rich erin barron s spanish english pocket dictionary routledge the encyclopedia of twentieth century latin american and caribbean literature 1900 2003 draws together entries on all aspects of literature including authors critics

las malas palabras the bad words dios necesito hab copy - Nov 06 2022

web dios necesito hab in a digitally driven world wherever screens reign great and immediate communication drowns out the subtleties of language the profound secrets and mental nuances hidden within words often move

103 versículos de la biblia sobre malas palabras bibleportal - Jun 01 2022

web 103 principales versículos de la biblia con imágenes sobre malas palabras ninguna palabra torpe salga de vuestra boca sino la que sea buena para edificación para que dé gracia á los oyentes

don t say bad words spanishdict - Jan 08 2023

web pronunciation don t say bad words dont sey bahd wuhrdz phrase 1 imperative used to address one person a no digas palabrotas informal singular don t say bad words mom will ground you no digas palabrotas mamá te va a castigar b no digas groserías informal singular don t say bad words it s not nice no digas groserías

las malas palabras the bad words dios necesito hab pdf - Aug 03 2022

web clave de los temas de la novísima gramática inglesa pearson ptr interactive this volume is part of a research program which started with the publication in 1972 of anna wierzbicka s groundbreaking work on semantic primitives

las malas palabras the bad words dios necesito hab - Jul 02 2022
web jul 6 2023 necesito hab getting the books las malas palabras the bad words dios necesito hab now is not type of challenging means you could not isolated going afterward book hoard or library or borrowing from your contacts to approach them this is an utterly easy means to specifically acquire guide by on line this online notice las malas
las malas palabras spanish translator - Mar 10 2023
web translate las malas palabras see spanish english translations with audio pronunciations examples and word by word explanations
las malas palabras the bad words dios necesito hab 2022 - Oct 05 2022
web 2 las malas palabras the bad words dios necesito hab 2021 08 01 public high school and their compassionate teacher and a reminder that in an era of nativism some americans are still breaking down walls and nurturing the seeds of the great american experiment the new york times book review
las malas palabras the bad words dios necesito hablarte god - Feb 26 2022
web religiÃ³n me salva pdf el libro de las malas palabras the book of bad words quÃ dice la biblia sobre las malas palabras y las groserÃas rimas de rap raperos dios necesito hablarte de juego pleto de dios necesito hablarte de plete bad english spanish dictionary wordreference frases de agradecimiento inglÃ s
las malas palabras the bad words dios necesito hab free pdf - Jul 14 2023
web botella al mar para el dios de las palabras para el dios de las palabras gabriel garcía márquez discurso en el primer congreso internacional de la lengua española celebrado en zacatecas méxico abril de 1997 a mis doce años de eda jun 25th 2023 entre las calles vivas de las palabras iv reflejo de las prácticas de cultura escrita
las malas palabras the bad words dios necesito hab vod - Jun 13 2023
web las malas palabras the bad words dios necesito hab downloaded from vod transcode uat mediacp net by guest jazlyn jair straits university of new mexico press 62 000 words phrases and examples 15 000 examples all fully translated full colour with 1000 colour photographs 1000 vocabulary and cultural notes cracking the male code rowman
las malas palabras the bad words dios necesito hab 2022 - Dec 27 2021
web 2 las malas palabras the bad words dios necesito hab 2021 08 04 clau who happens to be a ghost and her cousin carlitos must conduct a séance under a full moon in order to unravel the mystery of the legend suddenly omega s magic begins to change and the key to understanding her powers is more complicated than she thought omega will have
las malas palabras the bad words dios necesito hab dora del - Jan 28 2022
web las malas palabras the bad words dios necesito hab palabras the bad words dios necesito hab then it is not directly done you could bow to even more approaching this life something like the world we offer you this proper as competently as easy

pretension to get those all we allow las malas palabras the bad words dios

versículos de la biblia sobre las malas palabras - Apr 30 2022

web efesios 5 4 4 ni palabras torpes ni necedades ni truhanerías que no convienen sino antes bien acciones de gracias santiago 3 9 10 9 con ella bendecimos al dios y padre y con ella maldecimos á los hombres los cuales son hechos á la semejanza de dios 10 de una misma boca proceden bendición y maldición

skye and north west highlands sea kayaking - Jul 02 2022

web buy skye and north west highlands sea kayaking by doug cooper online at alibris we have new and used copies available in 1 editions starting at 28 14 shop now

skye north west highlands sea kayaking goodreads - Jun 01 2022

web read just invest little epoch to read this on line broadcast skye and north west highlands sea kayaking as capably as review them wherever you are now skye and north west

trips scottish sea kayaking inspiration information - Apr 11 2023

web trip morar arisaig skye raasay when it comes to scottish sea kayaking the islands of skye and raasay are two of the most iconic destinations with classic

sea kayaking the scottish highlands wilderness - Oct 05 2022

web the northern isles south west sea kayaking rough water handling kayak touring the scottish bothy bible day walks on the isle of skye skye and north west highlands

skyeandnorthwesthighlandsseakayaking 2022 dev sfcg - Aug 03 2022

web skye north west highlands sea kayaking book read reviews from world s largest community for readers

skye and nw highlands sea kayaking sample pesda press - Jun 13 2023

web skye and north west highlands sea kayaking the north west of scotland is quite simply the best place to paddle a sea kayak in the world gordon brown ardnamurchan

skye and north west highlands sea kayaking paperback - Nov 25 2021

skye and north west highlands sea kayaking alibris - Apr 30 2022

web mar 1 2017 skye and north west highlands sea kayaking by doug cooper bücher gebraucht und günstig kaufen jetzt online bestellen und gleichzeitig die umwelt

skye and nw highlands sea kayaking sample issuu - Jan 28 2022

web mar 1 2017 buy skye and north west highlands sea kayaking by doug cooper from waterstones today click and collect from your local waterstones or get free uk

the best isle of skye kayaking canoeing tripadvisor - Mar 10 2023
web jul 4 2016 whitewave skye s outdoor centre 23 climbing tours water sports by simoncb4715nl our instructor bryn was great at keeping us and our boys safe while
north east coasts of scotland sea kayaking - Oct 25 2021

welcome to sea to skye xperience sea to skye xperience - Jul 14 2023
web explore wild scotland go kayaking go hill walking sea to skye xperience offer spectacular sea kayaking and hill walking adventures on the isle of skye and the north
north west highlands scottish sea kayaking inspiration - Aug 15 2023
web skye and north west highlands sea kayaking this guidebook features 17 trips in the north west highlands in total you ll find details of 50 trips from from ardnamurchan
skye and north west highlands sea kayaking lillian beckwith - Mar 30 2022
web apr 7 2017 read skye and nw highlands sea kayaking sample by pesda press on issuu and browse thousands of other publications on our platform start here
skye north west highlands sea kayaking - Nov 06 2022
web canoe expeditions the great glen the river spey canoe courses paddleboarding paddleboard hire half day sup full day sup sup xl sup expeditions great glen
skye and north west highlands sea kayaking von doug cooper - Feb 26 2022
web mallaig marina mallaig is one of the most picturesque villages on the rugged north west coastline of scotland and is ideally placed for sailing to the small isles knoydart skye
skye and north west highlands sea kayaking - May 12 2023
web jan 2 2021 sea kayak guidebook covering skye and the north west highlands details of fifty journeys from ardnamurchan point to cape wrath
skye north west highlands sea kayaking sea kayak oban - Jan 08 2023
web skye north west highlands sea kayaking 19 99 in stock add to basket delivery information this new book by doug cooper has arrived the north west of scotland is
skye and north west highlands sea kayaking explore highland - Sep 04 2022
web skye and north west highlands sea kayaking the north west of scotland is quite simply the best place to paddle a sea kayak in the world gordon brown on the north
skye the north west sail scotland - Dec 27 2021

web author doug cooper a selection of 45 great sea kayak voyages around the north and east coasts of mainland of scotland 10 in stock

skye and north west highlands sea kayaking pesda shop - Dec 07 2022

web mar 8 2017 format paperback 264 pages 240mm x 170mm colour photos and maps availability in print 24 99 buy now or add to basket add to wishlist

skye and north west highlands sea kayaking paperback - Feb 09 2023

web buy skye and north west highlands sea kayaking 1st edition march 2017 by doug cooper isbn 9781906095574 from amazon s book store everyday low prices and

e2020 quiz answers english 11 pdf pdf - Sep 03 2022

web jul 3 2023 e2020 english 11 quiz answers pdf download only web may 11 2023 e2020 english 11 quiz answers lia erc gov ph web e2020 quiz answers english 11

e2020 english 11 answers help environment harvard edu - Jan 27 2022

web merely said the e2020 english 11 answers is universally compatible with any devices to read the iroquois book of rites horatio hale 1883 from manuscripts obtained from

e2020 answers folder quizlet - Aug 14 2023

web quizlet has study tools to help you learn anything improve your grades and reach your goals with flashcards practice tests and expert written solutions today

e2020 answers english 11 wrbb neu edu - Oct 24 2021

web e2020 answers english 11 1 e2020 answers english 11 right here we have countless book e2020 answers english 11 and collections to check out we additionally have

e2020 quiz answers english 11 book - Apr 29 2022

web e2020 quiz answers english 11 unveiling the magic of words a overview of e2020 quiz answers english 11 in a global defined by information and interconnectivity the

e2020 english 11 quiz answers home rightster com - Aug 02 2022

web e2020 english 11 quiz answers e2020 english 11 quiz answers e2020 english 11 a pretest answers taftaf de e2020 english 11 a pretest answers wuddie de e2020

e2020 answers for english 11b by mankyrecords82 issuu - Mar 09 2023

web dec 30 2017 e2020 answers for english 11b pdf free access for e2020 answers for english 11b pdf from our huge library or simply read online from your computer instantly

2021 1443 □□□□□□□□ □□ □□□□□ □□□ □□□□ □□ □□□□□□□ □□□□□□ □□□□□ - Sep 22 2021

web □□□ □□□□□□□ □□□□□□□□ □□□□□□ □□□□□ □□□ □□□□□□ □□□□ □□□□□□ □□□□□ □□□□□□□□□□ □□□□ □□□□□□□ □□□□□□□ □□□□□□ □□□□□ □□□□□□□ □□□□□□□□ □□□□□□□ □□□□□□□□ □□□□□ □□□□□ □□□□□□ 3 □□□ □□□□□ 11 □□ □□□□□□□□

yds yabancı dil bilgisi seviye tespit sınavı osym gov tr - Dec 06 2022

web jun 19 2021 2021 elektronik yabancı dil sınavı e yds 2021 8 İngilizce sonuçları açıklandı 19 haziran 2021 tarihinde uygulanan 2021 elektronik yabancı dil sınavının e

e2020 quiz answers english 11 pdf download only - Jul 01 2022

web jun 9 2023 e2020 english 11 quiz answers pdf full pdf web may 17 2023 you could purchase guide e2020 english 11 quiz answers pdf or get it as soon as feasible you

e Ü international relations office - Dec 26 2021

web ege Ünİversİtesİ huzurlu Üniversite kaliteli eğitim aydınlık gelecek gençlik cad no 12 35040 bornova İzmİr telefon 90 232 311 1080 1081 1082 1083 1084 1085

english 11 e2020 semester 1 exam answers pdf w9 keyhole - Apr 10 2023

web nov 8 2022 english 11 e2020 semester 1 exam answers 1 2 downloaded from w9 keyhole co on november 8 2022 by guest english 11 e2020 semester 1 exam

e yds 2020 11 İngilizce başvurularının alınması 02 09 2020 - Jun 12 2023

web sep 2 2020 e yds 2020 11 İngilizce başvurularının alınması e yds 2020 11 İngilizce alanında 17 ekim 2020 tarihinde ankara İstanbul ve İzmir deki e sınav uygulama

e2020 english 11 quiz answers pdf byu5 domains byu edu - Feb 25 2022

web feb 28 2023 them is this e2020 english 11 quiz answers that can be your partner e2020 english 11 answers learning catalyst basf com web jan 26 2023 e2020 english

english 11 e2020 semester 1 exam answers pdf win raid - Jan 07 2023

web english 11 e2020 semester 1 exam answers how to get answers for any homework or test cbse syllabus for class 11 english for academic year 2020 2021 bill ackman

edgenuity english 11 cumulative exam answers answers for - Jul 13 2023

web edgenuity english 11 answers coub edgenuity english answers edgenuity english 9 unit test answers edgenuity english 11 answers edgenuity english 10 answers

yds yabancı dil bilgisi seviye tespit sınavı osym gov tr - Feb 08 2023

web feb 15 2020 2020 elektronik yabancı dil sınavı e yds 2020 2 İngilizce sonuçları açıklandı 15 Şubat 2020 tarihinde yapılan 2020 elektronik yabancı dil sınavının e yds

e2020 english 11 quiz answers pdf download - Mar 29 2022

web ebook e2020 english 11 quiz answers pdf books this is the book you are looking for from the many other titlesof e2020 quiz answers english 11

e2020english11 book - Nov 24 2021

web e2020 english 11 quiz answers thomas paine this e2020 english 11 quiz answers but end up in infectious downloads rather than enjoying a good book with a cup of coffee in the

e2020 english 11 quiz answers pdf download only - Oct 04 2022

web may 11 2023 invest little become old to retrieve this on line message e2020 english 11 quiz answers pdf as with ease as review them wherever you are now e2020 answers

e2020 answers english 11 ilovingdocs files wordpress com - May 31 2022

web e2020 answers english 11 subject e2020 answers english 11 pdf keywords get free access to pdf ebook e2020 answers english 11 pdf get e2020 answers

e2020 english 11 quiz answers - Nov 05 2022

web kindly say the e2020 english 11 quiz answers is universally compatible with any devices to read e2020 english 11 quiz answers downloaded from

pdf e2020 english 11 answers free download - May 11 2023

web aug 22 2023 recognizing the pretension ways to acquire this books e2020 english 11 answers is additionally useful you have remained in right site to start getting this info