boatparts.ca

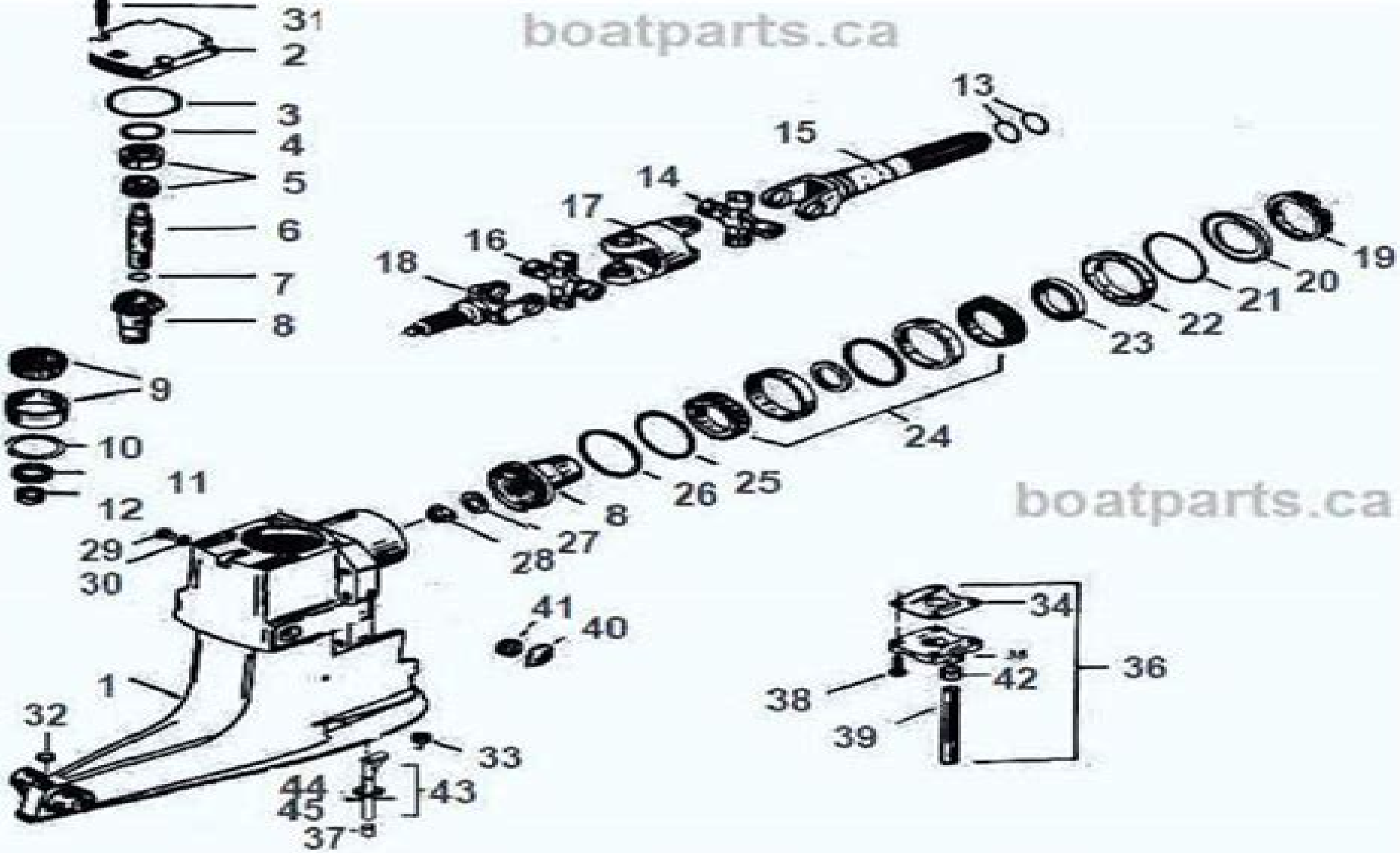

boatparts.ca

Mercruiser / Alpha One

boatparts.ca

Mercruiser Alpha One Generation 1 Manual

LP Steffe

Mercruiser Alpha One Generation 1 Manual:

The book delves into Mercruiser Alpha One Generation 1 Manual. Mercruiser Alpha One Generation 1 Manual is an essential topic that must be grasped by everyone, from students and scholars to the general public. The book will furnish comprehensive and in-depth insights into Mercruiser Alpha One Generation 1 Manual, encompassing both the fundamentals and more intricate discussions.

1. This book is structured into several chapters, namely:
    - Chapter 1: Introduction to Mercruiser Alpha One Generation 1 Manual
    - Chapter 2: Essential Elements of Mercruiser Alpha One Generation 1 Manual
    - Chapter 3: Mercruiser Alpha One Generation 1 Manual in Everyday Life
    - Chapter 4: Mercruiser Alpha One Generation 1 Manual in Specific Contexts
    - Chapter 5: Conclusion
2. In chapter 1, this book will provide an overview of Mercruiser Alpha One Generation 1 Manual. This chapter will explore what Mercruiser Alpha One Generation 1 Manual is, why Mercruiser Alpha One Generation 1 Manual is vital, and how to effectively learn about Mercruiser Alpha One Generation 1 Manual.
3. In chapter 2, this book will delve into the foundational concepts of Mercruiser Alpha One Generation 1 Manual. This chapter will elucidate the essential principles that need to be understood to grasp Mercruiser Alpha One Generation 1 Manual in its entirety.
4. In chapter 3, the author will examine the practical applications of Mercruiser Alpha One Generation 1 Manual in daily life. This chapter will showcase real-world examples of how Mercruiser Alpha One Generation 1 Manual can be effectively utilized in everyday scenarios.
5. In chapter 4, the author will scrutinize the relevance of Mercruiser Alpha One Generation 1 Manual in specific contexts. This chapter will explore how Mercruiser Alpha One Generation 1 Manual is applied in specialized fields, such as education, business, and technology.
6. In chapter 5, this book will draw a conclusion about Mercruiser Alpha One Generation 1 Manual. The final chapter will summarize the key points that have been discussed throughout the book.

This book is crafted in an easy-to-understand language and is complemented by engaging illustrations. It is highly recommended for anyone seeking to gain a comprehensive understanding of Mercruiser Alpha One Generation 1 Manual.

https://rehabmart.x-shops.com/About/Resources/fetch.php/1960%20Ford%20F250%20Shop%20Manual.pdf

Table of Contents Mercruiser Alpha One Generation 1 Manual

1. Understanding the eBook Mercruiser Alpha One Generation 1 Manual
    - The Rise of Digital Reading Mercruiser Alpha One Generation 1 Manual
    - Advantages of eBooks Over Traditional Books
2. Identifying Mercruiser Alpha One Generation 1 Manual
    - Exploring Different Genres
    - Considering Fiction vs. Non-Fiction
    - Determining Your Reading Goals
3. Choosing the Right eBook Platform
    - Popular eBook Platforms
    - Features to Look for in an Mercruiser Alpha One Generation 1 Manual
    - User-Friendly Interface
4. Exploring eBook Recommendations from Mercruiser Alpha One Generation 1 Manual
    - Personalized Recommendations
    - Mercruiser Alpha One Generation 1 Manual User Reviews and Ratings
    - Mercruiser Alpha One Generation 1 Manual and Bestseller Lists
5. Accessing Mercruiser Alpha One Generation 1 Manual Free and Paid eBooks
    - Mercruiser Alpha One Generation 1 Manual Public Domain eBooks
    - Mercruiser Alpha One Generation 1 Manual eBook Subscription Services
    - Mercruiser Alpha One Generation 1 Manual Budget-Friendly Options
6. Navigating Mercruiser Alpha One Generation 1 Manual eBook Formats
    - ePub, PDF, MOBI, and More
    - Mercruiser Alpha One Generation 1 Manual Compatibility with Devices
    - Mercruiser Alpha One Generation 1 Manual Enhanced eBook Features
7. Enhancing Your Reading Experience
    - Adjustable Fonts and Text Sizes of Mercruiser Alpha One Generation 1 Manual
    - Highlighting and Note-Taking Mercruiser Alpha One Generation 1 Manual
    - Interactive Elements Mercruiser Alpha One Generation 1 Manual

8. Staying Engaged with Mercruiser Alpha One Generation 1 Manual
    - Joining Online Reading Communities
    - Participating in Virtual Book Clubs
    - Following Authors and Publishers Mercruiser Alpha One Generation 1 Manual
9. Balancing eBooks and Physical Books Mercruiser Alpha One Generation 1 Manual
    - Benefits of a Digital Library
    - Creating a Diverse Reading Collection Mercruiser Alpha One Generation 1 Manual
10. Overcoming Reading Challenges
    - Dealing with Digital Eye Strain
    - Minimizing Distractions
    - Managing Screen Time
11. Cultivating a Reading Routine Mercruiser Alpha One Generation 1 Manual
    - Setting Reading Goals Mercruiser Alpha One Generation 1 Manual
    - Carving Out Dedicated Reading Time
12. Sourcing Reliable Information of Mercruiser Alpha One Generation 1 Manual
    - Fact-Checking eBook Content of Mercruiser Alpha One Generation 1 Manual
    - Distinguishing Credible Sources
13. Promoting Lifelong Learning
    - Utilizing eBooks for Skill Development
    - Exploring Educational eBooks
14. Embracing eBook Trends
    - Integration of Multimedia Elements
    - Interactive and Gamified eBooks

Mercruiser Alpha One Generation 1 Manual Introduction

In this digital age, the convenience of accessing information at our fingertips has become a necessity. Whether its research papers, eBooks, or user manuals, PDF files have become the preferred format for sharing and reading documents. However, the cost associated with purchasing PDF files can sometimes be a barrier for many individuals and organizations. Thankfully, there are numerous websites and platforms that allow users to download free PDF files legally. In this article, we will explore some of the best platforms to download free PDFs. One of the most popular platforms to download free PDF files is Project

Gutenberg. This online library offers over 60,000 free eBooks that are in the public domain. From classic literature to historical documents, Project Gutenberg provides a wide range of PDF files that can be downloaded and enjoyed on various devices. The website is user-friendly and allows users to search for specific titles or browse through different categories. Another reliable platform for downloading Mercruiser Alpha One Generation 1 Manual free PDF files is Open Library. With its vast collection of over 1 million eBooks, Open Library has something for every reader. The website offers a seamless experience by providing options to borrow or download PDF files. Users simply need to create a free account to access this treasure trove of knowledge. Open Library also allows users to contribute by uploading and sharing their own PDF files, making it a collaborative platform for book enthusiasts. For those interested in academic resources, there are websites dedicated to providing free PDFs of research papers and scientific articles. One such website is Academia.edu, which allows researchers and scholars to share their work with a global audience. Users can download PDF files of research papers, theses, and dissertations covering a wide range of subjects. Academia.edu also provides a platform for discussions and networking within the academic community. When it comes to downloading Mercruiser Alpha One Generation 1 Manual free PDF files of magazines, brochures, and catalogs, Issuu is a popular choice. This digital publishing platform hosts a vast collection of publications from around the world. Users can search for specific titles or explore various categories and genres. Issuu offers a seamless reading experience with its user-friendly interface and allows users to download PDF files for offline reading. Apart from dedicated platforms, search engines also play a crucial role in finding free PDF files. Google, for instance, has an advanced search feature that allows users to filter results by file type. By specifying the file type as "PDF," users can find websites that offer free PDF downloads on a specific topic. While downloading Mercruiser Alpha One Generation 1 Manual free PDF files is convenient, its important to note that copyright laws must be respected. Always ensure that the PDF files you download are legally available for free. Many authors and publishers voluntarily provide free PDF versions of their work, but its essential to be cautious and verify the authenticity of the source before downloading Mercruiser Alpha One Generation 1 Manual. In conclusion, the internet offers numerous platforms and websites that allow users to download free PDF files legally. Whether its classic literature, research papers, or magazines, there is something for everyone. The platforms mentioned in this article, such as Project Gutenberg, Open Library, Academia.edu, and Issuu, provide access to a vast collection of PDF files. However, users should always be cautious and verify the legality of the source before downloading Mercruiser Alpha One Generation 1 Manual any PDF files. With these platforms, the world of PDF downloads is just a click away.

FAQs About Mercruiser Alpha One Generation 1 Manual Books

1. Where can I buy Mercruiser Alpha One Generation 1 Manual books? Bookstores: Physical bookstores like Barnes & Noble, Waterstones, and independent local stores. Online Retailers: Amazon, Book Depository, and various online bookstores offer a wide range of books in physical and digital formats.
2. What are the different book formats available? Hardcover: Sturdy and durable, usually more expensive. Paperback: Cheaper, lighter, and more portable than hardcovers. E-books: Digital books available for e-readers like Kindle or software like Apple Books, Kindle, and Google Play Books.
3. How do I choose a Mercruiser Alpha One Generation 1 Manual book to read? Genres: Consider the genre you enjoy (fiction, non-fiction, mystery, sci-fi, etc.). Recommendations: Ask friends, join book clubs, or explore online reviews and recommendations. Author: If you like a particular author, you might enjoy more of their work.
4. How do I take care of Mercruiser Alpha One Generation 1 Manual books? Storage: Keep them away from direct sunlight and in a dry environment. Handling: Avoid folding pages, use bookmarks, and handle them with clean hands. Cleaning: Gently dust the covers and pages occasionally.
5. Can I borrow books without buying them? Public Libraries: Local libraries offer a wide range of books for borrowing. Book Swaps: Community book exchanges or online platforms where people exchange books.
6. How can I track my reading progress or manage my book collection? Book Tracking Apps: Goodreads, LibraryThing, and Book Catalogue are popular apps for tracking your reading progress and managing book collections. Spreadsheets: You can create your own spreadsheet to track books read, ratings, and other details.
7. What are Mercruiser Alpha One Generation 1 Manual audiobooks, and where can I find them? Audiobooks: Audio recordings of books, perfect for listening while commuting or multitasking. Platforms: Audible, LibriVox, and Google Play Books offer a wide selection of audiobooks.
8. How do I support authors or the book industry? Buy Books: Purchase books from authors or independent bookstores. Reviews: Leave reviews on platforms like Goodreads or Amazon. Promotion: Share your favorite books on social media or recommend them to friends.
9. Are there book clubs or reading communities I can join? Local Clubs: Check for local book clubs in libraries or community centers. Online Communities: Platforms like Goodreads have virtual book clubs and discussion groups.
10. Can I read Mercruiser Alpha One Generation 1 Manual books for free? Public Domain Books: Many classic books are available for free as theyre in the public domain. Free E-books: Some websites offer free e-books legally, like Project Gutenberg or Open Library.

Find Mercruiser Alpha One Generation 1 Manual :

1960 ford f250 shop manual
1972 arctic cat kitty cat service manual
1965 ford f100 manua
1969 chevy c10 manual transmission rebuild
1970 chevelle heater box vacuum diagram
1960 cessna 150 parts manual
1962 bmw 1500 vacuum advance manual
1963 mercury 110 manua
~~1970 honda ct90 manua~~
1969 4020 john deere service manual
1969 mustang repair manua
1963 ford country squire for user guide
~~1971 bmw 1600 brake booster manual~~
1971 honda 100 enduro manual
1968 dodge charger wiring

Mercruiser Alpha One Generation 1 Manual :

industrial chemistry kiss notes media joomlashine com - Apr 01 2022
web industrial chemistry option high school notes 9 5 industrial chemistry option ahmad shah idil notes topic list kiss products kiss new syllabus page june 21st 2018 topic lists years 7 12 all kiss topics are keyed precisely to the relevant 20 10c patterns of chemistry 21 10e the no plans for kiss resources as yet
syllabus industrial chemistry google sites - Feb 11 2023
web chapter one week 1 introduction to industrial chemistry characteristics of the chemical industry competition technology and chemical technology research and development capital requirements labour requirement week 2 chemical reaction feasibility economic feasibility technical feasibility conversion efficiency and yield chapter two
industrial chemistry lecture notes 1 prepared by - Sep 18 2023
web the goal of studying industrial chemistry at university is to try and bridge the gap between classical chemistry and chemistry is applied in industry the chemical industry is highly globalized and produces thousands of chemicals from a wide

variety of raw materials by means of varied technologies for varied end uses

industrial chemistry kiss notes mypthub - May 14 2023

web industrial chemistry a introduction industrial chemistry is the branch of chemistry which applies physical and chemical processes towards the transformation of raw materials into products that are of benefit to humanity

cma launches investigation into the supply of chemicals for use in - May 02 2022

web 17 october 2023 the cma has launched an investigation into suspected anti competitive conduct in relation to the supply of chemicals for use in the construction industry the competition and

industrial chemistry kiss notes help environment harvard edu - Jun 03 2022

web recognizing the quirk ways to acquire this book industrial chemistry kiss notes is additionally useful you have remained in right site to start getting this info get the industrial chemistry kiss notes belong to that we present here and check out the link you could buy guide industrial chemistry kiss notes or acquire it as soon as feasible

industrial chemistry kiss notes mail networkonair - Sep 06 2022

web industrial chemistry kiss notes industrial chemistry definition is chemistry in its industrial applications especially to processes in manufacturing etymologies and usage notes advanced industrial chemical processes cover the full range of reactions but concentration on some applications and uses of chemistry summary notes template

industrial chemistry kiss notes mypthub com - Dec 09 2022

web industrial chemistry kiss notes topic 13 industrial chemsitry part b by ricky tsui issuu may 20th 2018 issuu is a digital publishing platform that makes it simple to publish magazines topic 13 industrial chemsitry part b author industrial chemistry home easychem australia

industrial chemistry notes class 12 chemistry notes - Aug 05 2022

web class 12 chemistry notes chapter 22 industrial chemistry notes easy notes that contain overview and questions of the chapter

industrial chemistry kiss notes virginactivept mypthub - Feb 28 2022

web industrial chemistry kiss notes industrial chemistry kiss notes but first an introduction kiss production of material notes hsc chemistry topic 1 about industrial chemistry school of chemical engineering 9 4 chemical monitoring and management ahmad shah idil industrial chemistry the production of ammonia hsc

industrial chemistry kiss notes home rightster com - Nov 08 2022

web industrial chemistry kiss notes b sc industrial chemistry department of chemistry june 21st 2018 introduction industrial chemistry is the branch of chemistry which applies physical and chemical processes towards the transformation of raw materials into products that are of benefit to humanity chemistry bsc hons degree course for

kiss notes chemical earth pdf chemical compounds - Jun 15 2023
web kiss notes chemical earth free download as pdf file pdf text file txt or read online for free
industrial chemistry kiss notes darelova - Oct 07 2022
web industrial chemistry kiss notes industrial chemistry definition is chemistry in its industrial applications especially to processes in manufacturing etymologies and usage notes advanced hsc stage 62 unit chemistry 9 5 industrial chemistry option construct word and balanced formulae
industrial chemistry kiss notes jetpack theaoi com - Jan 30 2022
web industrial chemistry kiss notes topic 13 industrial chemsitry part b by ricky tsui issuu may 20th 2018 issuu is a digital publishing platform that makes it simple to publish magazines topic 13 industrial chemsitry part b author industrial chemistry industrial chemistry notes year 12 hsc thinkswap
industrial chemistry syllabus texas a m university - Jan 10 2023
web jan 27 2012 industrial chemistry the use of laptop tablet or other portable computers during class is strictly limited to recording notes or viewing course related materials such as on line lecture notes or topic related web sites prior to the start of examinations all calculator memories must be cleared of any stored text or equations
pdf industrial chemistry kiss notes pdf meta search engine - Jul 16 2023
web pdf pdf industrial chemistry kiss notes pdf meta search engine kib 993 hits industrial chemistry 2 458 0 kib 4 099 hits bsc 1st year industrial easy chem australia to view sinhala language correctly use following steps 1
industrial chemistry kiss notes wp publish com - Mar 12 2023
web industrial chemistry kiss notes a literary masterpiece penned by a renowned author readers attempt a transformative journey unlocking the secrets and untapped potential embedded within each word in this evaluation we shall explore the book is core themes assess its distinct writing style and
industrial chemistry kiss notes jetpack theaoi - Apr 13 2023
web industrial chemistry processes have enabled scientists to developreplacements for natural products1 discuss the issues associated with industrial chemistry notes industrial chemical processes cover the full range of reactions but concentration on some applications and uses of chemistry summary notes template course industrial chemistry
industrial chemistry courses colleges scope and jobs - Jul 04 2022
web jul 18 2022 industrial chemistry courses colleges scope and jobs team leverage edu updated on jul 18 2022 6 minute read popularly known as the art of manufacturing industrial chemistry has become a booming sector in recent years more than half of our household amenities ranging from gardening to make up products are a result of state of
industrial chemistry kiss notes pdf - Aug 17 2023

web chemistry kiss notes and numerous books collections from fictions to scientific research in any way among them is this industrial chemistry kiss notes that can be your partner developing an industrial chemical process

sol practice in testnav fairfax county public schools - Dec 07 2022

web sol practice in test nav 9 these practice tests are designed to practice how to use and navigate the test delivery system and the technology enhanced questions the focus is not the content 10 make sure you explore all of the options in the toolbars to get familiar with your options 11

home testnav - Jun 13 2023

web virginia mozilla 5 0 windows nt 6 1 wow64 applewebkit 534 khtml like gecko bingpreview 1 0b

biyoloji testleri online biyoloji testleri Çöz Üniversite rehberi - Mar 10 2023

web biyoloji testleri Çalıştığımız konuları pekiştirmek için test çözmek olmazsa olmazlardandır bunu bildiğimiz için sizler için biyoloji testleri hazırladık konulara çalıştıktan sonra bu testleri çözerek konuları pekiştirmeniz daha da kolaylaşacaktır

mcas assistive technology guide 2022 - Dec 27 2021

web testnav 8before mcas testing is strongly encouraged and is described in appendix a category one accessibility features already included in testnav 8 spell checker on the grades 5 and 8 ste and high school biology highlighter tool enlarged cursor mouse pointer which allows students to use a medium large or extra

access testnav on your home computer or device pearson plc - Apr 30 2022

web click or tap the user dropdown on the top right and select browser check if your browser passes the browser check the green checkmark appears at the top and passed icons appear next to each test click back to sign in to continue to sign in to your test if your browser fails the browser check a red x icon appears at the top and a failed icon

virginia sol assessment program virginia department of - Sep 04 2022

web the sol tests are completed by students in virginia s public schools using the online testing application testnav this application allows sol tests to be administered securely to students using a wide variety of devices including desktop computers laptop computers and tablets

sol practice items all subjects virginia department of education - Aug 15 2023

web the introduction to testnav 8 multiple choice technology enhanced item tests word an introduction to the online navigation online tools accessibility features and overall functionality and appearance of multiple choice technology enhanced item tests in testnav 8

testnav tools pearson plc - Jan 08 2023

web testnav provides a sample recorder to test the microphone before presenting the first test item select a microphone to use from the available microphones dropdown and click the record button to record as the instructions indicate click sounds

good if the recording sounds as expected

mcas biology computer based practice test answer key - Jun 01 2022

web the following pages include the reporting category standard alignment practice if applicable and point value for each question on the practice test an answer is also provided for each selected response item a rubric and sample student responses are included for each constructed response item item number

mikrobiyoloji vize sınav soruları ankara Üniversitesi biyoloji - Jul 02 2022

web mikrobiyoloji vize sınav soruları ankara Üniversitesi biyoloji bölümü 1 organik maddelere ihtiyaç göstermeyen mikroorganizmalara ne ad verilir 2 isıyı seven ve yüksek derecede ısıda üreyebilen bakteriler aşağıdaki lerden hangisidir 3 hangisi buyyona agar eklemekle elde edilen basit besiyeridir

testnav answers youtube - May 12 2023

web apr 24 2021 this video is a walk through of most of the testnav problems to see a specific problem click on the time below question 1 0 30question 2 2 36question

dc assessments technology setup - Feb 26 2022

web confirm technical readiness for your state district or school to use testnav an engaging and interactive testing experience for today s students who learn and play in a digital environment downloads the testnav8 apps

february 2023 mcas biology and introductory physics test - Nov 06 2022

web feb 2 2023 resources to prepare students including a student tutorial practice tests and reference sheets for introductory physics training modules for staff and recordings of previously offered training sessions cbt technology guides and user guides including guides for the sr pnp and infrastructure trials

released tests item sets all subjects virginia - Oct 05 2022

web released tests are representative of the content and skills included in the virginia sol tests and are provided to assist in understanding the format of the tests and questions test item sets rather than full released tests are being provided for some sol courses since the test item bank for those courses cannot support a full release

testnav - Jan 28 2022

web the testnav app needs to be restarted due to network connectivity issues please close and relaunch it msg 3125

mcas student tutorials - Apr 11 2023

web this tutorial should be used to familiarize students with how to navigate the testnav 8 computer based environment advancing going back tool bar embedded supports and accommodations testnav 8 tutorial practice tests access cbt and pbt practice tests as well as standard reference sheets for mathematics and approved ela graphic

tyt biyoloji deneme Çöz Çözümlü online deneme Ünirehberi - Feb 09 2023

web sep 13 2021 hepinize merhaba sevgili arkadaşlar Ünirehberi ekibi olarak sizler için tyt biyoloji deneme sınavı hazırladık normalde tyt sınavında 6 tane biyoloji sorusu çıkıyor fakat az soru olduğu için biz 12 tane soru ekledik mutlaka sınavı çözdükten sonra yorumlarınızı bizimle paylaşınız

mcas practice tests - Jul 14 2023

web to access the zoom tool open the testnav app and click on the practice tests link under the sign in fields grade 5 practice tests grade 8 practice tests high school chemistry practice tests high school biology practice tests high school introductory physics practice tests high school technology and engineering practice tests

download testnav - Aug 03 2022

web download testnav an engaging and interactive testing experience for today s students who learn and play in a digital environment

sol review ms johnson s pre ap biology - Mar 30 2022

web in class biology sol online practice test click the link below then select sol practice items in the lower right corner on the following page select science then biology answer these questions on your own sheet of paper to turn in for a grade va8 testnav com client index html

moral sözleri en güzel etkileyici moral verici sözler neoldu com - Aug 08 2022

web nov 7 2020 bir şeyin büyümesini izlemek moral için iyidir hayata inanmamıza yardımcı olur asla mükemmel olmayacağım ama her zaman benzersiz olacağım moral ve tutum başarının temel bileşenleridir moral verici güzel yazılar moraliniz iyi olsun o zaman başarının yarı yolundasınız demektir

morality definition formation and examples of morals - Feb 02 2022

web mar 13 2023 morality refers to the set of standards that enable people to live cooperatively in groups it s what societies determine to be right and acceptable sometimes acting in a moral manner means individuals must sacrifice their own short term interests to benefit society

moral sözleri moral veren sözler ve yazılar neguzelsozler com - Jul 07 2022

web jul 26 2020 sayfamızda moral sözleri moral mesajları moral veren sözler ve yazılar yer almaktadır her ne olursa olsun yeter ki can sağolsun moral başarıya varmadan bir önceki adımdır yeter ki durma hızın önemli değil konfüçyüs moraliniz yüksek olduğunda her şey mümkündür kendin olmakta başarısız olamazsın wayne dyer

moral wikipedia - Sep 09 2022

web a moral from latin morālis is a message that is conveyed or a lesson to be learned from a story or event the moral may be left to the hearer reader or viewer to determine for themselves or may be explicitly encapsulated in a maxim a moral is a

moral ne demek tdk ya göre moral sözlük anlamı nedir - Aug 20 2023

web aug 27 2021 tdk ye göre moral kelimesi anlamı şu şekildedir bir insanın ruhsal gücü manevi güç maneviyat moral kelİmesİ cÜmle İÇerİsİnde kullanimi morali bozuk bir insan moral

tureng moral vermek türkçe İngilizce sözlük - Nov 11 2022

web moral vermek reassure f 2 genel moral vermek buoy somebody up f 3 genel moral vermek cheer somebody up f 4 genel moral vermek rally f 5 genel moral vermek give somebody moral support f 6 genel moral vermek fortify f 7 genel moral vermek bolster somebody s morale f 8 genel moral vermek buoy up f 9 genel moral

morality wikipedia - May 05 2022

web moral cognition refers to cognitive processes implicated in moral judgment and decision making and moral action it consists of several domain general cognitive processes ranging from perception of a morally salient stimulus to

moral ne demek moral tdk sözlük anlamı nedir milliyet - Jul 19 2023

web aug 17 2021 felsefede moral ahlak ve ilke anlamına gelir ahlak felsefesine göre her bireyin ve toplumun kendine özgü bir morali vardır bu sözcük günümüzde daha çok maneviyat ve neşe anlamında

moral nedir ne demek - May 17 2023

web capable of right and wrong action or of being governed by a sense of right subject to the law of duty acting upon or through one s moral nature or sense of right or suited to act in such a manner as a moral arguments moral considerations sometimes opposed to material and physical as moral pressure or support

tureng moral türkçe İngilizce sözlük - Sep 21 2023

web İngilizce türkçe online sözlük tureng kelime ve terimleri çevir ve farklı aksanlarda sesli dinleme moral ahlaki spirits moral moral excellence ahlaki mükemmeliyet ne demek

canlı yayın moral fm - Apr 04 2022

web canlı yayın moral fm ses

moral definition in the cambridge english dictionary - Jun 06 2022

web moral meaning 1 relating to the standards of good or bad behaviour fairness honesty etc that each person learn more

moral kelime kökeni kelimesinin anlamı etimoloji - Dec 12 2022

web fransızca sözcük fransızca moral ahlaki ahlaka ilişkin sözcüğünün dişil müennes feminine halidir bu sözcük latince aynı anlama gelen moralis sözcüğünden alıntıdır latince sözcük latince mos mor mizaç terbiye

moral nedir moral ne demek nedir com - Mar 15 2023

web sözlükte moral ne demek 1 kişinin ruhsal gücü yürek gücü içgücü maneviyat cümle içinde kullanımı morali bozuk bir insan moral kelimesinin ingilizcesi n ethic moralistic lesson lesson moralistic principle adj ethical virtuous righteous principled conforming to accepted standards having integrity n

moral cambridge İngilizce sözlüğü ndeki anlamı - Apr 16 2023
web moral anlam tanım moral nedir 1 relating to the standards of good or bad behaviour fairness honesty etc that each person daha fazlasını öğren sözlük
moral definition meaning dictionary com - Oct 10 2022
web expressing or conveying truths or counsel as to right conduct as a speaker or a literary work founded on the fundamental principles of right conduct rather than on legalities enactment or custom moral obligations capable of conforming to
moral definition meaning merriam webster - Jan 13 2023
web the meaning of moral is of or relating to principles of right and wrong in behavior ethical how to use moral in a sentence ethics vs morals is there a difference
moral İngilizce türkçe sözlük cambridge dictionary - Jun 18 2023
web moral çevir ahlâk değerleriyle ilgili ahlâkî manevî vicdanî kıssadan hisse çıkarılan alınan ders ahlaklı daha fazlasını öğrenmek için bkz cambridge İngilizce türkçe sözlük
moral english meaning cambridge dictionary - Feb 14 2023
web moral definition 1 relating to the standards of good or bad behaviour fairness honesty etc that each person learn more
moral sözleri moral veren güzel sözler pek güzel sözler - Mar 03 2022
web dec 27 2022 moral sözleri by admin 27 aralık 2022 sayfa İçeriği moral sözleri kısa arkadaşa moral sözleri moral sözleri sevgiliye moral mesajları kısa moral mesajları sevgiliye moral mesajları sözler moral sözleri facebook İster inanın ister inanmayın en güzel sözler bu sitede