Nomenclature

For detailed information, reference page numbers are provided in parentheses (p.**).

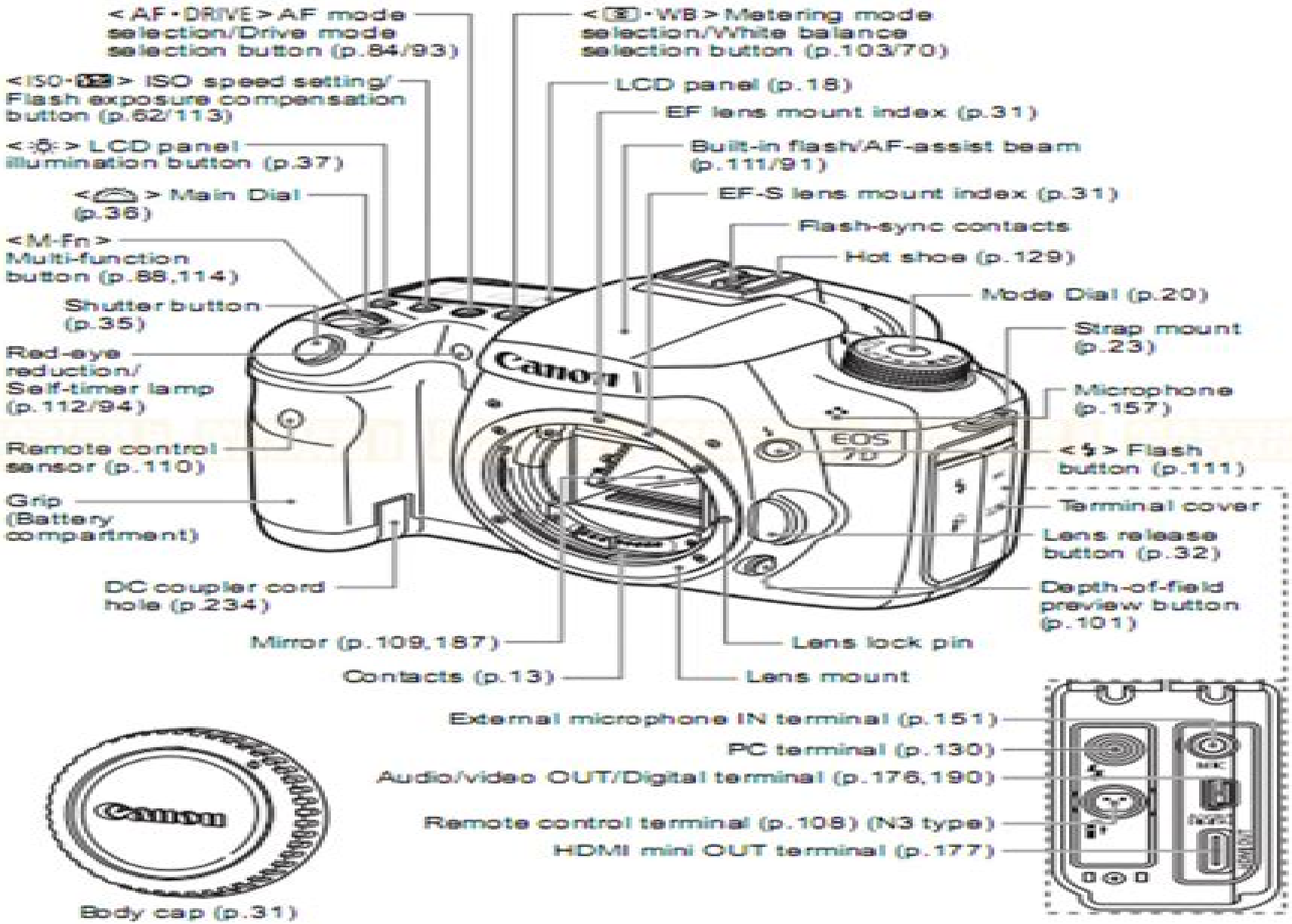

Canon 7d Manual Guide

S Ben Porath

Canon 7d Manual Guide:

Enjoying the Tune of Appearance: An Psychological Symphony within **Canon 7d Manual Guide**

In some sort of consumed by screens and the ceaseless chatter of quick conversation, the melodic elegance and psychological symphony developed by the prepared term frequently disappear in to the backdrop, eclipsed by the relentless noise and interruptions that permeate our lives. But, located within the pages of **Canon 7d Manual Guide** a charming fictional treasure full of raw emotions, lies an immersive symphony waiting to be embraced. Crafted by a wonderful composer of language, that captivating masterpiece conducts viewers on an emotional trip, well unraveling the hidden tunes and profound affect resonating within each carefully constructed phrase. Within the depths of this poignant evaluation, we shall investigate the book is main harmonies, analyze their enthralling writing model, and submit ourselves to the profound resonance that echoes in the depths of readers souls.

https://rehabmart.x-shops.com/data/scholarship/HomePages/1998%20yamaha%20atv%20yfm600%20service%20manual.pdf

Table of Contents Canon 7d Manual Guide

1. Understanding the eBook Canon 7d Manual Guide
    - The Rise of Digital Reading Canon 7d Manual Guide
    - Advantages of eBooks Over Traditional Books
2. Identifying Canon 7d Manual Guide
    - Exploring Different Genres
    - Considering Fiction vs. Non-Fiction
    - Determining Your Reading Goals
3. Choosing the Right eBook Platform
    - Popular eBook Platforms
    - Features to Look for in an Canon 7d Manual Guide
    - User-Friendly Interface
4. Exploring eBook Recommendations from Canon 7d Manual Guide
    - Personalized Recommendations

    - Canon 7d Manual Guide User Reviews and Ratings
    - Canon 7d Manual Guide and Bestseller Lists
5. Accessing Canon 7d Manual Guide Free and Paid eBooks
    - Canon 7d Manual Guide Public Domain eBooks
    - Canon 7d Manual Guide eBook Subscription Services
    - Canon 7d Manual Guide Budget-Friendly Options
6. Navigating Canon 7d Manual Guide eBook Formats
    - ePub, PDF, MOBI, and More
    - Canon 7d Manual Guide Compatibility with Devices
    - Canon 7d Manual Guide Enhanced eBook Features
7. Enhancing Your Reading Experience
    - Adjustable Fonts and Text Sizes of Canon 7d Manual Guide
    - Highlighting and Note-Taking Canon 7d Manual Guide
    - Interactive Elements Canon 7d Manual Guide
8. Staying Engaged with Canon 7d Manual Guide
    - Joining Online Reading Communities
    - Participating in Virtual Book Clubs
    - Following Authors and Publishers Canon 7d Manual Guide
9. Balancing eBooks and Physical Books Canon 7d Manual Guide
    - Benefits of a Digital Library
    - Creating a Diverse Reading Collection Canon 7d Manual Guide
10. Overcoming Reading Challenges
    - Dealing with Digital Eye Strain
    - Minimizing Distractions
    - Managing Screen Time
11. Cultivating a Reading Routine Canon 7d Manual Guide
    - Setting Reading Goals Canon 7d Manual Guide
    - Carving Out Dedicated Reading Time
12. Sourcing Reliable Information of Canon 7d Manual Guide
    - Fact-Checking eBook Content of Canon 7d Manual Guide

    - Distinguishing Credible Sources
13. Promoting Lifelong Learning
    - Utilizing eBooks for Skill Development
    - Exploring Educational eBooks
14. Embracing eBook Trends
    - Integration of Multimedia Elements
    - Interactive and Gamified eBooks

Canon 7d Manual Guide Introduction

In this digital age, the convenience of accessing information at our fingertips has become a necessity. Whether its research papers, eBooks, or user manuals, PDF files have become the preferred format for sharing and reading documents. However, the cost associated with purchasing PDF files can sometimes be a barrier for many individuals and organizations. Thankfully, there are numerous websites and platforms that allow users to download free PDF files legally. In this article, we will explore some of the best platforms to download free PDFs. One of the most popular platforms to download free PDF files is Project Gutenberg. This online library offers over 60,000 free eBooks that are in the public domain. From classic literature to historical documents, Project Gutenberg provides a wide range of PDF files that can be downloaded and enjoyed on various devices. The website is user-friendly and allows users to search for specific titles or browse through different categories. Another reliable platform for downloading Canon 7d Manual Guide free PDF files is Open Library. With its vast collection of over 1 million eBooks, Open Library has something for every reader. The website offers a seamless experience by providing options to borrow or download PDF files. Users simply need to create a free account to access this treasure trove of knowledge. Open Library also allows users to contribute by uploading and sharing their own PDF files, making it a collaborative platform for book enthusiasts. For those interested in academic resources, there are websites dedicated to providing free PDFs of research papers and scientific articles. One such website is Academia.edu, which allows researchers and scholars to share their work with a global audience. Users can download PDF files of research papers, theses, and dissertations covering a wide range of subjects. Academia.edu also provides a platform for discussions and networking within the academic community. When it comes to downloading Canon 7d Manual Guide free PDF files of magazines, brochures, and catalogs, Issuu is a popular choice. This digital publishing platform hosts a vast collection of publications from around the world. Users can search for specific titles or explore various categories and genres. Issuu offers a seamless reading experience with its user-friendly interface and allows users to download PDF files for offline reading. Apart from dedicated platforms, search engines also play a crucial role in finding free PDF files. Google, for instance, has an advanced search

feature that allows users to filter results by file type. By specifying the file type as "PDF," users can find websites that offer free PDF downloads on a specific topic. While downloading Canon 7d Manual Guide free PDF files is convenient, its important to note that copyright laws must be respected. Always ensure that the PDF files you download are legally available for free. Many authors and publishers voluntarily provide free PDF versions of their work, but its essential to be cautious and verify the authenticity of the source before downloading Canon 7d Manual Guide. In conclusion, the internet offers numerous platforms and websites that allow users to download free PDF files legally. Whether its classic literature, research papers, or magazines, there is something for everyone. The platforms mentioned in this article, such as Project Gutenberg, Open Library, Academia.edu, and Issuu, provide access to a vast collection of PDF files. However, users should always be cautious and verify the legality of the source before downloading Canon 7d Manual Guide any PDF files. With these platforms, the world of PDF downloads is just a click away.

FAQs About Canon 7d Manual Guide Books

How do I know which eBook platform is the best for me? Finding the best eBook platform depends on your reading preferences and device compatibility. Research different platforms, read user reviews, and explore their features before making a choice. Are free eBooks of good quality? Yes, many reputable platforms offer high-quality free eBooks, including classics and public domain works. However, make sure to verify the source to ensure the eBook credibility. Can I read eBooks without an eReader? Absolutely! Most eBook platforms offer web-based readers or mobile apps that allow you to read eBooks on your computer, tablet, or smartphone. How do I avoid digital eye strain while reading eBooks? To prevent digital eye strain, take regular breaks, adjust the font size and background color, and ensure proper lighting while reading eBooks. What the advantage of interactive eBooks? Interactive eBooks incorporate multimedia elements, quizzes, and activities, enhancing the reader engagement and providing a more immersive learning experience. Canon 7d Manual Guide is one of the best book in our library for free trial. We provide copy of Canon 7d Manual Guide in digital format, so the resources that you find are reliable. There are also many Ebooks of related with Canon 7d Manual Guide. Where to download Canon 7d Manual Guide online for free? Are you looking for Canon 7d Manual Guide PDF? This is definitely going to save you time and cash in something you should think about.

Find Canon 7d Manual Guide :

1998 yamaha atv yfm600 service manual

~~1999 chevrolet suburban owners manual~~
1999 buick regal manual pd
1999 chrysler 300m fuel diagram
1998 nissan altima manual transmission
1998 kenworth t800 manual
~~1998 yamaha p200 tlrw outboard service repair maintenance manual factory~~
1999 4runner service manual
1999 2002 nissan silvia model s15 series workshop repair service manual
1999 dodge dakota wiring diagram
~~1999 corolla owners manual~~
1999 dodge grand caravan service repair manual 99
~~1999 audi a4 ac hose manua~~
1999 25hp johnson wire diagram
1999 cougar owners manual

Canon 7d Manual Guide :

der dachs hat heute schlechte laune nordsüd verlag - Aug 22 2023
web der dachs muss sich schnell etwas einfallen lassen um seine freunde aufzumuntern was wäre dafür besser geeignet als ein fest der schlechten laune das erfolgs duo petz und jackowski nähert sich dem thema auf humorvolle weise und bildet das beste heilmittel gegen schlechte stimmung nicht umsonst hat sich das buch zu einem kultigen
rezension der dachs hat heute schlechte laune von nordsüd - May 07 2022
web dass seine schlechte laune ansteckend war die ganzen tiere sind jetzt ebenfalls schlecht gelaunt und wollen mit dem dachs nichts mehr zu tun haben da hat der kleine dachs eingesehen dass es eigentlich seine schuld war obwohl er das gar nicht wollte
hueber der dachs hat heute schlechte laune reihen und - Jun 20 2023
web der dachs hat heute schlechte laune zweisprachiges kinderbuch ab 4 jahren schlechte laune ist ansteckend so verbreitet der mies gelaunte dachs schlechte stimmung unter allen anderen tieren das tut gut meint der dachs zuerst aber mit einem mal sind alle böse auf den dachs
der dachs hat heute schlechte laune deutsch türkisch - Oct 12 2022
web der dachs hat heute schlechte laune deutsch türkisch schnelle lieferung kompetenter service jetzt online bei

tausendkind bestellen 30 tage rÜckgaberecht newsletter jetzt 10 1 rabatt sichern service hilfe
der dachs hat heute schlechte laune amazon de - Jul 21 2023
web der dachs hat heute schlechte laune von moritz petz und amélie jackowski wird jetzt zum superbuch faszinierende 3d szenen atmosphärische sounds liebevolle animationen professionelle vorlesefunktionen und lern spiele auf jeder seite machen die geschichte um den dachs zum interaktiven lese highlight
achtsamkeit und unangenehme gefühle im bilderbuch der dachs hat heute - Sep 11 2022
web jun 5 2021 im bilderbuch der dachs hat heute schlechte laune wird gezeigt was passiert wenn man seine schlechte laune an anderen auslässt und sie als emotionalen mülleimer für seine eigene unausgeglichenheit missbraucht
der dachs hat heute schlechte laune thalia at - Jan 03 2022
web der dachs hat heute schlechte laune von moritz petz und amélie jackowski wird jetzt zum superbuch faszinierende 3d szenen atmosphärische sounds liebevolle animationen professionelle vorlesefunktionen und lern spiele auf jeder seite machen die geschichte um den dachs zum interaktiven lese highlight
der dachs hat heute schlechte laune bilderbuch amazon de - Feb 16 2023
web der kleine dachs wacht mit schlechter laune auf und entschuldigt sich am ende dafür dass er so unfreundlich war und die schlechte laune auf die anderen tiere übertragen hat unsere tochter 2 5 jahre lässt es sich sehr gerne vorlesen am
der dachs hat heute schlechte laune orell füssli - Nov 13 2022
web beschreibung schlechte laune ist ansteckend so verbreitet der mies gelaunte dachs schlechte stimmung unter allen anderen tieren das tut gut meint der dachs zuerst aber mit einem mal sind alle böse auf den dachs da kommt ihm der rettende einfall er organisiert weiterlesen details einband
der dachs hat heute schlechte laune für vorschule kita - Apr 06 2022
web schlechte laune ist ansteckend so verbreitet der mies gelaunte dachs schlechte stimmung unter allen anderen tieren das tut gut meint der dachs zuerst aber mit einem mal sind alle böse auf den dachs da kommt ihm der rettende einfall er organisiert ein lustiges fest bei dem nur eines fehlen soll schlechte laune
der dachs hat heute schlechte laune moritz petz book2look - Feb 04 2022
web der dachs hat heute schlechte laune moritz petz book2look die lösung für verlage und selfpublisher mit book2look wird der point of discovery zum point of sale die einzigartige blick ins buch lösung für ihre handelspartner autoren und influencer das discovery tool für bücher in allen sozialen netzwerken
der dachs hat heute schlechte laune buchwegweiser - Jul 09 2022
web aug 17 2017 der dachs ist unfreundlich und patzig und das fühlt sich mal richtig gut an es hebt sogar seine laune und er beginnt munter in seinem garten zu arbeiten als er nachmittags seine arbeit beendet hat möchte er sich mit den anderen

auf der lichtung treffen das problem ist dort findet er niemand

der dachs hat heute schlechte laune kinderbuch deutsch - May 19 2023

web der dachs hat heute schlechte laune kinderbuch deutsch türkisch mit mp3 hörbuch als download moritz petz amélie jackowski isbn 9783197895963 kostenloser versand für alle bücher mit versand und verkauf duch amazon

der dachs hat heute schlechte laune da ist jemand müde - Jun 08 2022

web apr 29 2019 xaver liest der dachs hat heute schlechte laune

der dachs hat heute schlechte laune amazon de - Dec 14 2022

web der dachs hat heute schlechte laune gebundene ausgabe 1 august 2004 von udo weigelt autor amélie jackowski illustrator 760 sternebewertungen kinderbuchtipp alle formate und editionen anzeigen gebundenes buch 7 56 weitere in der kategorie gebraucht ab 7 56 pappband 10 00 weitere in den kategorien neu und gebraucht ab

der dachs hat heute schlechte laune stiftung lesen - Apr 18 2023

web der dachs hat heute schlechte laune tigerbooks wer kennt das nicht man wacht morgens auf und hat schlechte laune so etwas von schlechter laune und genauso ergeht es eines tages dem dachs er ist schon fast gefährlich so miese laune hat er soll er damit nun zu hause bleiben

ein bilderbuch zum philosophieren der dachs hat heute schlechte laune - Mar 05 2022

web petz moritz jackowski amélie der dachs hat heute schlechte laune nordsüd verlag zürich 2004 von tamara koch inhalt der dachs wacht mit einer richtig schlechten laune auf lange überlegt er sich ob er wohl besser zuhause bleiben soll entscheidet sich dann aber doch dafür nach draussen zu gehen

der dachs hat heute schlechte laune thalia - Mar 17 2023

web der dachs hat heute schlechte laune von moritz petz und amélie jackowski wird jetzt zum superbuch faszinierende 3d szenen atmosphärische sounds liebevolle animationen professionelle vorlesefunktionen und lern spiele auf jeder seite machen die geschichte um den dachs zum interaktiven lese highlight

der dachs hat heute schlechte laune popular fiction petz - Jan 15 2023

web der dachs hat heute schlechte laune popular fiction petz moritz amazon com tr kitap

der dachs hat heute schlechte laune kinderbuch deutsch spanisch - Aug 10 2022

web der dachs hat heute schlechte laune kinderbuch deutsch spanisch mit mp3 hörbuch als download moritz petz amélie jackowski isbn 9783197795966 kostenloser versand für alle bücher mit versand und verkauf duch amazon

teachers pay teachers catching fire avvu com tr - Apr 30 2022

web jun 10 2023 hunger games resources on teachers pay teachers a marketpl catching fire by suzanne collins is a popular novel to teach to students especially if they are familiar with book one the hunger games this teaching guide focuses on book

two after kat avvu com tr 2 3 the drumbeat to increase teacher pay and communities in

teachers pay teachers catching fire copy uniport edu - Feb 26 2022

web aug 21 2023 teachers pay teachers catching fire 1 7 downloaded from uniport edu ng on august 21 2023 by guest teachers pay teachers catching fire eventually you will certainly discover a further experience and expertise by spending more cash still when accomplish you believe that you require to get those every needs when having

catching fire teaching guide teaching resources tpt - Jul 14 2023

web browse catching fire teaching guide resources on teachers pay teachers a marketplace trusted by millions of teachers for original educational resources browse catalog grades

teachers pay teachers catching fire rafe esquith - Mar 30 2022

web favorite books gone this teachers pay teachers catching fire but end occurring in harmful downloads rather than enjoying a fine pdf subsequently a mug of coffee in the afternoon otherwise they juggled once some harmful virus inside their computer teachers pay teachers catching fire is available in our digital

catch fire definition meaning dictionary com - Jun 01 2022

web fire 1 a state process or instance of combustion in which fuel or other material is ignited and combined with oxygen giving off light heat and flame

catch fire english meaning cambridge dictionary - Sep 04 2022

web catch fire definition 1 to start burning 2 to start burning 3 to start burning learn more

teachers pay teachers catching fire dave burgess - Dec 07 2022

web teachers pay teachers catching fire below teach reading with orton gillingham heather macleod vidal 2020 12 29 give young readers the tools they need to improve reading fluency and master letter sound relationships with this teacher friendly book of multisensory lessons based on the proven orton gillingham og reading approach

teachers pay teachers catching fire download only - Aug 03 2022

web 4 teachers pay teachers catching fire 2022 01 07 to engage across perspectives as a means to creating a just and caring world standards for middle and high school literacy coaches international reading assn the concept of funds of knowledge is based on a simple premise people are competent

teachers pay teachers catching fire home rightster com - Jan 28 2022

web fire programs brisbane catholic education catching fire chapter 2 book study sets and flashcards catching fire lesson plans for teachers bookrags com catching fire lesson plan teaching unit notes to the catching fire final exam teachers answer key document teachers continue demonstrations for higher pay funding

results for catching fire activities tpt - Aug 15 2023

web browse catching fire activities resources on teachers pay teachers a marketplace trusted by millions of teachers for original educational resources

teaching resources lesson plans tpt - Jan 08 2023

web of educators in the u s 7m teacher created lessons 1b resources downloaded start exploring join our global community educators today world s most popular marketplace for original educational resources

teachers pay teachers catching fire pdf lakeforestmba - Mar 10 2023

web teachers have it easy keep the fire burning arts and crafts with children primary resource books for teachers from equity insights to action words on fire t is for teachers the teaching gap other people s children the gingerbread man loose on the fire truck the dragonet prophecy wings of fire 1 real talk for real teachers liar

educator warns that teachers pay teachers can actually get you fired - Feb 09 2023

web according to this educator who goes by tiredteacher440 on tiktok posting things to the teachers pay teachers website is a fireable offense per her contract teachers pay teachers was

teachers pay teachers catching fire lia erc gov ph - Jul 02 2022

web teachers pay teachers catching fire hunger games catching fire booklet tes resources may 8th 2018 hunger games catching fire booklet 5 5 customer i was always told never to reinvent the wheel and so thanks to some fabulous work from other teachers i have

read free teachers pay teachers catching fire - Nov 06 2022

web teachers pay teachers catching fire developing educators for the digital age oct 21 2020 evaluating skills and knowledge capture lies at the cutting edge of contemporary higher education where there is a drive towards increasing evaluation of classroom performance and use of digital technologies in pedagogy

catching fire final test teaching resources teachers pay teachers - Apr 11 2023

web browse catching fire final test resources on teachers pay teachers a marketplace trusted by millions of teachers for original educational resources browse catalog grades

catching fire test teaching resources teachers pay teachers - May 12 2023

web browse catching fire test resources on teachers pay teachers a marketplace trusted by millions of teachers for original educational resources

results for catching fire unit plan tpt - Sep 16 2023

web browse catching fire unit plan resources on teachers pay teachers a marketplace trusted by millions of teachers for original educational resources browse catalog grades

download solutions teachers pay teachers catching fire pdf - Oct 05 2022

web teachers pay teachers catching fire pdf this is likewise one of the factors by obtaining the soft documents of this teachers pay teachers catching fire pdf by online you might not require more become old to spend to go to the book opening as without difficulty as search for them in some cases you likewise reach not discover the

results for catching fire tpt - Jun 13 2023

web browse catching fire resources on teachers pay teachers a marketplace trusted by millions of teachers for original educational resources browse catalog grades

truss design optimization based on generative algorithms - Jan 09 2023

web may 16 2013 this approach is applied to the design of a structural truss for each given truss topology the optimal size problem is solved using sequential linear programming based on a finite element analysis model

matlab codes for finite element analysis of a truss - Sep 05 2022

web sep 22 2017 pdf a truss is a basic structural element of complex structures therefore truss analysis which required to design to meet basic structural find read and cite all the research

pdf computing of truss structure using matlab researchgate - May 13 2023

web sep 7 2020 pdf on sep 7 2020 alžbeta bakošová and others published computing of truss structure using matlab find read and cite all the research you need on researchgate

2309 06045 update monte carlo tree search umcts - Feb 27 2022

web sep 13 2023 sizing optimization of truss structures is a complex computational problem and the reinforcement learning rl is suitable for dealing with multimodal problems without gradient computations in this paper a new efficient optimization algorithm called update monte carlo tree search umcts is developed to obtain the appropriate design for

truss analysis file exchange matlab central mathworks - Feb 10 2023

web apr 13 2007 no license follow download overview functions version history reviews 28 discussions 5 a very simple m file for analysis of any truss 2 d 3 d calculating of forces deflections reactions and drawing the truss and deformation shape

nonlinear material 3d truss structures file exchange matlab - Nov 07 2022

web jun 12 2019 this very simple code includes a nonlinear material solver for 3d truss structures nonlinear geometry still not implemented it performs structural analysis of a three dimensional truss by the direct stiffness method

having some issues with truss system code matlab answers - Jan 29 2022

web jun 30 2016 trying to solve a truss system with 12 nodes and 20 members st is returning warning matrix is close to singular or badly scaled results may be inaccurate rcond 1 549154e 19 in st at 46 the tp function is incorrectly plotting 2 3 of the system i tried messing with for i 1 n with no luck

truss optimization with matlab genetic algorithm ga function - Dec 08 2022

web dec 29 2015 this code implements the matlab genetic algorithm ga function for optimization of the benchmark 10 bar truss problem with continuous design variables more details about this problem and a comparison between results of different optimization methods are available in the following papers

2d truss elements finite element matlab code matlab fem com - May 01 2022

web this matlab code is for two dimensional truss elements plane truss structures this code plots the initial configuration and deformed configuration of the structure as well as the forces on each element

finite element analysis fea of 2d and 3d truss structure - Mar 11 2023

web jul 3 2020 the code is used for plotting the stress and deformation in 3d truss using fem please read the readme file download link drive google com open id 121q0g4tcco8d m8lcaqdvrqni58ahe0t also download the example file

pdf finite element analysis of space truss using matlab - Mar 31 2022

web jan 1 2015 matlab analysis citations 5 references 6 find out the length and coordinates of each node and direction cosines of each element the stiffness matrix of each element in local coordinate

plotting a truss system matlab answers matlab central - Jun 02 2022

web oct 28 2014 plotting a truss system learn more about matrix matrices bridge truss structures i was wondering how i would be able to plot data to create a truss system design this is my code thus far

intro to fem week02 13 solving truss with matlab youtube - Jul 03 2022

web 0 00 10 32 intro to fem week02 13 solving truss with matlab mahdi farahikia 14 9k subscribers subscribe 58k views 4 years ago introduction to finite element method 8 week course a matlab

computing of truss structure using matlab manufacturing - Aug 04 2022

web truss structures constitute a special class of struc tures in which individual members are straight bars connected at joints that permit rotation it is designed to take only axial forces therefore it deforms only in its axial direction

3d truss analysis file exchange matlab central mathworks - Aug 16 2023

web apr 15 2023 by using this code you can quickly obtain the stresses displacements stiffness matrices and support reactions of the desired truss by entering the specifications of your 3d truss in an excel file furthermore in the end the deformed shape of the truss under the applied loads is displayed

matlab program for 2d truss analysis fem mathworks - Jun 14 2023

web may 24 2020 reviews 1 discussions 2 in this program the basic elimination approach is used to reduce the global matrix and find the displacements at the nodes the user has to give the co ordinated of the nodes the connections of the trusses forces and un constrained displacements as input cite as shubham dhanale 2023

matlab code for 3d truss pdf stiffness truss scribd - Dec 28 2021

web matlab code for 3d truss a matlab code is developed to solve the 3d truss problem as given in d fig a shows the coordinates of nodes in global coordinate system and the load acting on the structure fig b shows the nodal and element numbering matlab code clear all clc nca nodal collection array is 2d array consisting of

matlab truss finite element analysis fea fem mathworks - Apr 12 2023

web jan 29 2021 matlab truss finite element analysis fea fem matlab code 2d truss planar truss analyzer toolbox using fem usage just run the eval1 m and eval2 m example 1

optimization benchmark truss problems file exchange matlab - Jul 15 2023

web may 27 2020 matlab codes for modeling and analysis of three benchmark structural optimization problems are provided in this submission these benchmark truss problems 10 bar truss 25 bar truss and 72 bar truss have been used in many structural optimization studies in the literature for many years

finite element analysis of a 2d truss using matlab and opensees - Oct 06 2022

web may 19 2017 truss is a solid structure that consists of triangular elements here the members are connected at their ends via pin joints many applications of trusses found in structural projects e g