1 Voltammetric instrumentation

1.1 Three electrodes voltammetry

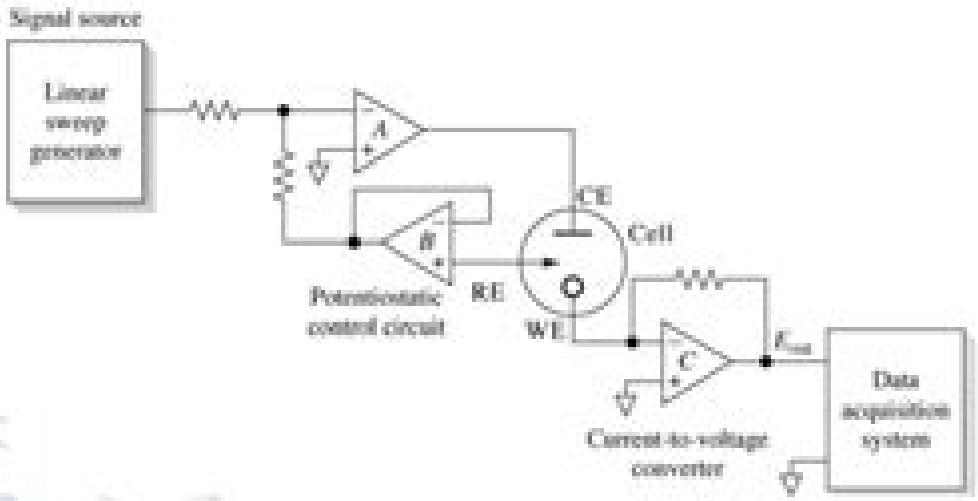

Fig. 25-2 (p.718) A system for potentiostatic three-electrode linear-scan voltammetry

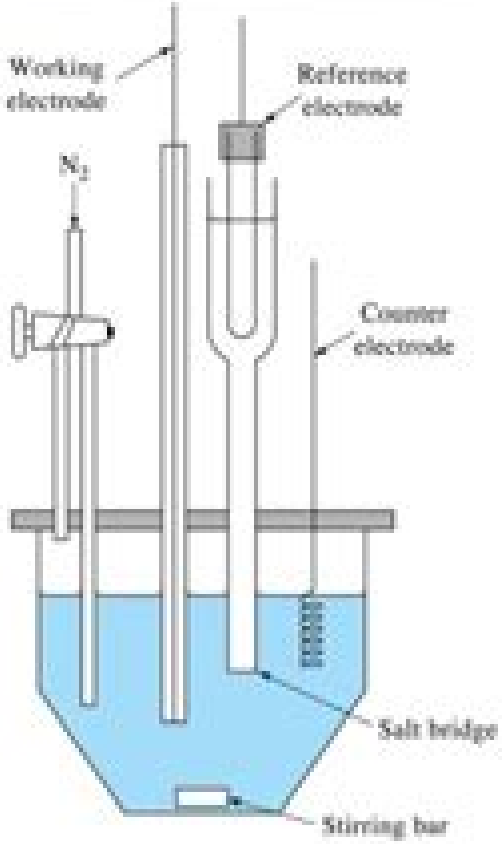

Fig. 25-8 (p.724) A three-electrode cell for hydrodynamic voltammetry.

Voltammetry Chapter 25 Electrochemistry Techniques Based On

J Elliott

Voltammetry Chapter 25 Electrochemistry Techniques Based On:

Ignite the flame of optimism with Crafted by is motivational masterpiece, Fuel Your Spirit with **Voltammetry Chapter 25 Electrochemistry Techniques Based On** . In a downloadable PDF format (*), this ebook is a beacon of encouragement. Download now and let the words propel you towards a brighter, more motivated tomorrow.

https://rehabmart.x-shops.com/results/scholarship/default.aspx/ein%20magier%20in%20noeten.pdf

Table of Contents Voltammetry Chapter 25 Electrochemistry Techniques Based On

1. Understanding the eBook Voltammetry Chapter 25 Electrochemistry Techniques Based On
    - The Rise of Digital Reading Voltammetry Chapter 25 Electrochemistry Techniques Based On
    - Advantages of eBooks Over Traditional Books
2. Identifying Voltammetry Chapter 25 Electrochemistry Techniques Based On
    - Exploring Different Genres
    - Considering Fiction vs. Non-Fiction
    - Determining Your Reading Goals
3. Choosing the Right eBook Platform
    - Popular eBook Platforms
    - Features to Look for in an Voltammetry Chapter 25 Electrochemistry Techniques Based On
    - User-Friendly Interface
4. Exploring eBook Recommendations from Voltammetry Chapter 25 Electrochemistry Techniques Based On
    - Personalized Recommendations
    - Voltammetry Chapter 25 Electrochemistry Techniques Based On User Reviews and Ratings
    - Voltammetry Chapter 25 Electrochemistry Techniques Based On and Bestseller Lists
5. Accessing Voltammetry Chapter 25 Electrochemistry Techniques Based On Free and Paid eBooks
    - Voltammetry Chapter 25 Electrochemistry Techniques Based On Public Domain eBooks
    - Voltammetry Chapter 25 Electrochemistry Techniques Based On eBook Subscription Services
    - Voltammetry Chapter 25 Electrochemistry Techniques Based On Budget-Friendly Options
6. Navigating Voltammetry Chapter 25 Electrochemistry Techniques Based On eBook Formats

- ePub, PDF, MOBI, and More
- Voltammetry Chapter 25 Electrochemistry Techniques Based On Compatibility with Devices
- Voltammetry Chapter 25 Electrochemistry Techniques Based On Enhanced eBook Features

7. Enhancing Your Reading Experience
    - Adjustable Fonts and Text Sizes of Voltammetry Chapter 25 Electrochemistry Techniques Based On
    - Highlighting and Note-Taking Voltammetry Chapter 25 Electrochemistry Techniques Based On
    - Interactive Elements Voltammetry Chapter 25 Electrochemistry Techniques Based On
8. Staying Engaged with Voltammetry Chapter 25 Electrochemistry Techniques Based On
    - Joining Online Reading Communities
    - Participating in Virtual Book Clubs
    - Following Authors and Publishers Voltammetry Chapter 25 Electrochemistry Techniques Based On
9. Balancing eBooks and Physical Books Voltammetry Chapter 25 Electrochemistry Techniques Based On
    - Benefits of a Digital Library
    - Creating a Diverse Reading Collection Voltammetry Chapter 25 Electrochemistry Techniques Based On
10. Overcoming Reading Challenges
    - Dealing with Digital Eye Strain
    - Minimizing Distractions
    - Managing Screen Time
11. Cultivating a Reading Routine Voltammetry Chapter 25 Electrochemistry Techniques Based On
    - Setting Reading Goals Voltammetry Chapter 25 Electrochemistry Techniques Based On
    - Carving Out Dedicated Reading Time
12. Sourcing Reliable Information of Voltammetry Chapter 25 Electrochemistry Techniques Based On
    - Fact-Checking eBook Content of Voltammetry Chapter 25 Electrochemistry Techniques Based On
    - Distinguishing Credible Sources
13. Promoting Lifelong Learning
    - Utilizing eBooks for Skill Development
    - Exploring Educational eBooks
14. Embracing eBook Trends
    - Integration of Multimedia Elements
    - Interactive and Gamified eBooks

Voltammetry Chapter 25 Electrochemistry Techniques Based On Introduction

Voltammetry Chapter 25 Electrochemistry Techniques Based On Offers over 60,000 free eBooks, including many classics that are in the public domain. Open Library: Provides access to over 1 million free eBooks, including classic literature and contemporary works. Voltammetry Chapter 25 Electrochemistry Techniques Based On Offers a vast collection of books, some of which are available for free as PDF downloads, particularly older books in the public domain. Voltammetry Chapter 25 Electrochemistry Techniques Based On : This website hosts a vast collection of scientific articles, books, and textbooks. While it operates in a legal gray area due to copyright issues, its a popular resource for finding various publications. Internet Archive for Voltammetry Chapter 25 Electrochemistry Techniques Based On : Has an extensive collection of digital content, including books, articles, videos, and more. It has a massive library of free downloadable books. Free-eBooks Voltammetry Chapter 25 Electrochemistry Techniques Based On Offers a diverse range of free eBooks across various genres. Voltammetry Chapter 25 Electrochemistry Techniques Based On Focuses mainly on educational books, textbooks, and business books. It offers free PDF downloads for educational purposes. Voltammetry Chapter 25 Electrochemistry Techniques Based On Provides a large selection of free eBooks in different genres, which are available for download in various formats, including PDF. Finding specific Voltammetry Chapter 25 Electrochemistry Techniques Based On, especially related to Voltammetry Chapter 25 Electrochemistry Techniques Based On, might be challenging as theyre often artistic creations rather than practical blueprints. However, you can explore the following steps to search for or create your own Online Searches: Look for websites, forums, or blogs dedicated to Voltammetry Chapter 25 Electrochemistry Techniques Based On, Sometimes enthusiasts share their designs or concepts in PDF format. Books and Magazines Some Voltammetry Chapter 25 Electrochemistry Techniques Based On books or magazines might include. Look for these in online stores or libraries. Remember that while Voltammetry Chapter 25 Electrochemistry Techniques Based On, sharing copyrighted material without permission is not legal. Always ensure youre either creating your own or obtaining them from legitimate sources that allow sharing and downloading. Library Check if your local library offers eBook lending services. Many libraries have digital catalogs where you can borrow Voltammetry Chapter 25 Electrochemistry Techniques Based On eBooks for free, including popular titles.Online Retailers: Websites like Amazon, Google Books, or Apple Books often sell eBooks. Sometimes, authors or publishers offer promotions or free periods for certain books.Authors Website Occasionally, authors provide excerpts or short stories for free on their websites. While this might not be the Voltammetry Chapter 25 Electrochemistry Techniques Based On full book , it can give you a taste of the authors writing style.Subscription Services Platforms like Kindle Unlimited or Scribd offer subscription-based access to a wide range of Voltammetry Chapter 25 Electrochemistry Techniques Based On eBooks, including some popular titles.

FAQs About Voltammetry Chapter 25 Electrochemistry Techniques Based On Books

How do I know which eBook platform is the best for me? Finding the best eBook platform depends on your reading preferences and device compatibility. Research different platforms, read user reviews, and explore their features before making a choice. Are free eBooks of good quality? Yes, many reputable platforms offer high-quality free eBooks, including classics and public domain works. However, make sure to verify the source to ensure the eBook credibility. Can I read eBooks without an eReader? Absolutely! Most eBook platforms offer webbased readers or mobile apps that allow you to read eBooks on your computer, tablet, or smartphone. How do I avoid digital eye strain while reading eBooks? To prevent digital eye strain, take regular breaks, adjust the font size and background color, and ensure proper lighting while reading eBooks. What the advantage of interactive eBooks? Interactive eBooks incorporate multimedia elements, quizzes, and activities, enhancing the reader engagement and providing a more immersive learning experience. Voltammetry Chapter 25 Electrochemistry Techniques Based On is one of the best book in our library for free trial. We provide copy of Voltammetry Chapter 25 Electrochemistry Techniques Based On in digital format, so the resources that you find are reliable. There are also many Ebooks of related with Voltammetry Chapter 25 Electrochemistry Techniques Based On. Where to download Voltammetry Chapter 25 Electrochemistry Techniques Based On online for free? Are you looking for Voltammetry Chapter 25 Electrochemistry Techniques Based On PDF? This is definitely going to save you time and cash in something you should think about. If you trying to find then search around for online. Without a doubt there are numerous these available and many of them have the freedom. However without doubt you receive whatever you purchase. An alternate way to get ideas is always to check another Voltammetry Chapter 25 Electrochemistry Techniques Based On. This method for see exactly what may be included and adopt these ideas to your book. This site will almost certainly help you save time and effort, money and stress. If you are looking for free books then you really should consider finding to assist you try this. Several of Voltammetry Chapter 25 Electrochemistry Techniques Based On are for sale to free while some are payable. If you arent sure if the books you would like to download works with for usage along with your computer, it is possible to download free trials. The free guides make it easy for someone to free access online library for download books to your device. You can get free download on free trial for lots of books categories. Our library is the biggest of these that have literally hundreds of thousands of different products categories represented. You will also see that there are specific sites catered to different product types or categories, brands or niches related with Voltammetry Chapter 25 Electrochemistry Techniques Based On. So depending on what exactly you are searching, you will be able to choose e books to suit your own need. Need to access completely for Campbell Biology Seventh Edition book? Access Ebook without any digging. And by having access to our ebook online or by storing it on your computer, you have convenient answers with Voltammetry Chapter 25 Electrochemistry Techniques Based On To get started finding Voltammetry Chapter 25 Electrochemistry Techniques Based On, you are right to find our website

which has a comprehensive collection of books online. Our library is the biggest of these that have literally hundreds of thousands of different products represented. You will also see that there are specific sites catered to different categories or niches related with Voltammetry Chapter 25 Electrochemistry Techniques Based On So depending on what exactly you are searching, you will be able tochoose ebook to suit your own need. Thank you for reading Voltammetry Chapter 25 Electrochemistry Techniques Based On. Maybe you have knowledge that, people have search numerous times for their favorite readings like this Voltammetry Chapter 25 Electrochemistry Techniques Based On, but end up in harmful downloads. Rather than reading a good book with a cup of coffee in the afternoon, instead they juggled with some harmful bugs inside their laptop. Voltammetry Chapter 25 Electrochemistry Techniques Based On is available in our book collection an online access to it is set as public so you can download it instantly. Our digital library spans in multiple locations, allowing you to get the most less latency time to download any of our books like this one. Merely said, Voltammetry Chapter 25 Electrochemistry Techniques Based On is universally compatible with any devices to read.

Find Voltammetry Chapter 25 Electrochemistry Techniques Based On :

ein magier in noeten
historic roadsides in new jersey
the russians acquisition mills boon modern
bus car manual
~~garden conifers in colour~~
1999 yamaha big bear 350 repair manual
b737 fmc user guides
improved test scores attitudes and behaviors in americas schools supervisors success stories
lg 49ub850v 49ub850v za led tv service manual
la chanson de salomon
wiring engine proton
american odyssey answer key section 4
83 honda cb450 manual
~~workshop manual for stihl 034 av chainsaw~~
earth science holt mcdougal answers section reviews

Voltammetry Chapter 25 Electrochemistry Techniques Based On :

Chili Cook Off Rules and Free Score Sheet Chili cook off rules and free score sheet, plus printable chili name cards, and ideas for how to host your own chili cook off. Chili Cook-Off Score sheet Chili Cook-Off Score sheet. Judges' Score Sheet. Score: 0 – 10 (10 is highest). Chili #: _____. Criteria. Criteria Thought Starters. Score. Taste. Chili should ... Chili Score Card Printable Chili Cook-Off Scorecard, Cook Off Competition Ranking Card, NO EDITING Required, Just Download & Print. (809). Sale Price $3.60 ... chili cookoff scorecard CHILI COOKOFF SCORECARD. NAME: RATE ON A SCALE OF 1 5, 5 BEING THE BEST. AROMA: CREATIVITY: FLAVOR: TEXTURE: PRESENTATION:. 7.7K+ Free Templates for 'Chili cook off scorecard template' Create free chili cook off scorecard template flyers, posters, social media graphics and videos in minutes. Choose from 7750+ eye-catching templates to wow ... Chili Cook Off Rules and Free Score Sheet Jan 5, 2017 - Chili cook off rules and free score sheet, plus printable chili name cards, and ideas for how to host your own chili cook off. Printable Chili Cook-Off Score Card Judges of a chili cookoff can use this set of note cards to assess the qualities of homemade chili based on appearance, smell, texture, and other factors. Hosting a Chili Cook-Off in 5 Easy Steps with Printables Jan 24, 2014 — Chili Cook Off Voting Ballots - Chili Score Cards - Chili - Rating Cards - Chili Contest - Annual Chili Cook Off-Printable - First to Third. Cookoff Score Cards Instant Download Chili Cook-Off Tasting and Rating Scorecard - White Background. (27). $6.00. The Restaurant Manager's Handbook: How to Set Up ... It helps you looks at all the different aspects of a restaurant. It goes over the basics of buying or leasing a restaurant, creating a succesful business plan, ... The Restaurant Manager's Handbook: How to Set Up ... The multiple award-winning Restaurant Manager s Handbook is the best-selling book on running a successful food service operation. The Restaurant Manager's Handbook: How to Set Up ... Shows how to set up, operate, and manage a financially successful food-service operation. This book cover the process of a restaurant start-up and ongoing ... The Restaurant Manager's Handbook: How... book by ... This comprehensive manual will show you step-by-step how to set up, operate, and manage a financially successful foodservice operation. Charts. Forms. The Restaurant Manager's Handbook This comprehensive 1,044 page Restaurant Manger's Handbook will show you step-by-step how to set up, operate, and manage a financially successful foodservice ... The Restaurant Manager's Handbook: How to Set Up ... This new, comprehensive 800-page book will show you step-by-step how to set up, operate, and manage a financially successful food service operation. The author ... The Restaurant Manager's Handbook: How to Set Up ... The multiple award-winning Restaurant Manager's Handbook is the best-selling book on running a successful food service operation. Now in the 4th completely ... The Restaurant Manager's Handbook - Brown | PDF | Menu Chapter 1 Grooming Standards General standards of image and grooming apply to both "Front of House" and Kitchen Staff. Excellent standards of ... The restaurant manager's handbook : how to set up, ... "The multiple award-winning Restaurant Manager's Handbook is the best-selling book on running a successful food service operation. The Restaurant Manager's Handbook: How to Set Up ... Dec 15, 2018 — The

multiple award-winning Restaurant Manager's Handbook is the best-selling book on running a successful food service operation. Water Reuse: Issues, Technologies, and Applications In-depth coverage of the theory and application of water reuse. Written by a team of world-renowned experts commissioned by Metcalf & Eddy, Water Reuse ... Water Reuse: Issues, Technologies, and Applications This landmark textbook presents an integrated approach to all aspects of water reuse _ from public health protection to water quality criteria and regulations ... Water Reuse: Issues, Technologies, and Applications ... This landmark textbook presents an integrated approach to all aspects of water reuse _ from public health protection to water quality criteria and regulations ... Water Reuse : Issues, Technologies, and Applications This landmark textbook presents an integrated approach to all aspects of water reuse _ from public health protection to water quality criteria and regulations ... Water reuse: issues, technologies and applications Jul 5, 2016 — Water reuse: issues, technologies and applications ; unepmap.descriptors, Water reuse, Irrigation, Sewage, Wastewater treatment ; unepmap. (PDF) Water Reuse Issues, Technologies, and Applications The contribution of water reuse (WR) would be great in the humankind's water tomorrow. This review aims to discuss the growing WR technology as a future ... Water Reuse: Issues, Technologies, and Applications Water Reuse: Issues, Technologies, and Applications equips water/wastewater students, engineers, scientists, and professionals with a definitive account of the ... Water Reuse: Issues, Technologies, and Applications This book equips water/wastewater students, engineers, scientists, and professionals with a definitive account of water reclamation, recycling, and reuse ... (PDF) Water Reuse: Issues, Technologies, and Applications May 30, 2016 — Current Situation and Prospect of Reclaimed Water Reuse ... The paper summarized current situation and treatment technology of the reclaimed water ... Water Reuse: Issues, Technologies, and Applications Water Reuse: Issues, Technologies, and Applications is a landmark textbook that presents an integrated approach to all aspects of water reuse.