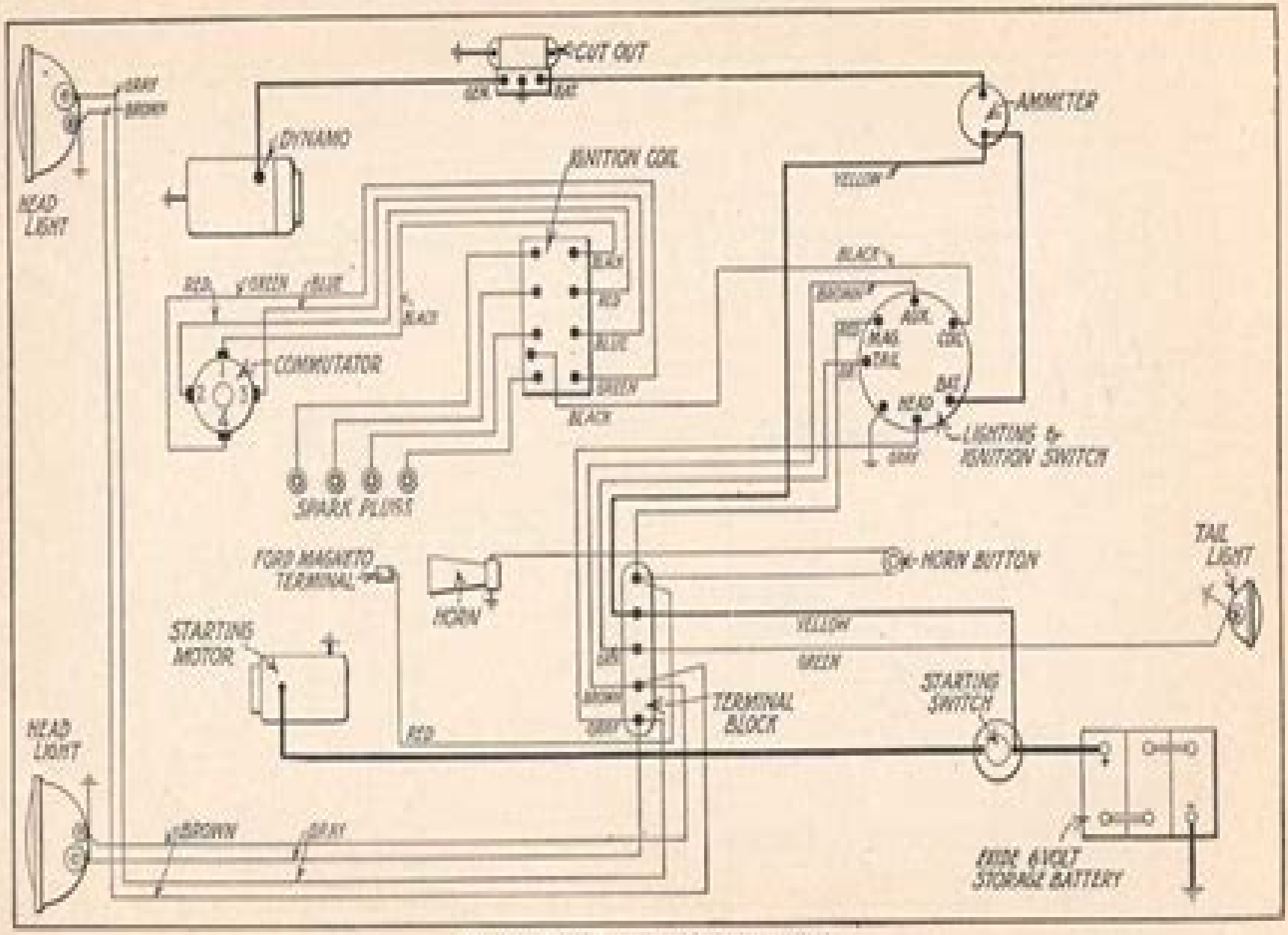

Fig. 67. Wiring Diagram with Cutout on Dash

Wiring For 1929 Model A

Peipei Pang

Wiring For 1929 Model A:

Restorer's Model A Shop Manual Jim Schild James J. Schild, **1926-1929** National Board of Fire Underwriters,1926 *L. A. Young Spring & Wire Corp. v. Falls, 307 MICH 69 (1943)* ,1943 53 *OLR Index* ,1928 **Collector's Originality Guide Ford Model A** Jim Schild, Collector s Originality Guide Ford Model A is the definitive guide to one of the greatest cars in American history The Ford Model A The successor to the ubiquitous and world changing Model T the Model A arrived on the scene in 1928 to considerable fanfare thanks to the marketing genius of Henry Ford And this much hyped car delivered exactly what the public wanted a solid reliable up to date and beautiful new car Naturally this car became an instant classic and has been a favorite among collectors and restorers for decades In this paperback reissue of the highly popular hardcover book author and photographer Jim Schild walks through all of the details of the Model A s four year production providing collectors with everything they need to know to identify classify and restore these fabulous cars Filled with gorgeous color photography this book has been and continues to be a must have for all Model A fans *Automotive Industries* ,1930 **The Dog Fancier** ,1930 The Big Three Michael J Kollins,2002-02-01 Pioneers of the U S Automobile Industry uses four separate volumes to explore the essential components that helped build the American automobile industry the people the companies and the designs This volume tells the fascinating story of the Big Three in American automotive history Ford General Motors and Chrysler and the people who made those companies grow Pioneers covered in this volume include Henry Ford Louis Chevrolet William Durant General Motors John and Horace Dodge Walter Chrysler **Iron, Bronze and Wire Work News** ,1928 Wire & Wire Products ... ,1968 Motor Age ,1939 Science Abstracts ,1930 Report Museum of Modern Art (New York, N.Y.),1966 **The Railway Signal Dictionary** Braman B.. Adams,Rodney Hitt,1912 *Automotive Industries, the Automobile* ,1930 *Machinery* Fred Herbert Colvin,Lester Gray French,1928 *Report of the Corporation Commission* North Carolina. Corporation Commission,1927 *Quarterly Bulletin* Canadian Standards Association,1927 *Electrical Manufacturing* ,1930 Montgomery Ward Montgomery Ward,1955

Enjoying the Beat of Expression: An Psychological Symphony within **Wiring For 1929 Model A**

In a global eaten by displays and the ceaseless chatter of instant connection, the melodic splendor and psychological symphony produced by the written word often diminish into the backdrop, eclipsed by the constant sound and distractions that permeate our lives. However, nestled within the pages of **Wiring For 1929 Model A** a wonderful literary treasure overflowing with natural thoughts, lies an immersive symphony waiting to be embraced. Crafted by a wonderful musician of language, this fascinating masterpiece conducts visitors on a psychological journey, well unraveling the concealed tunes and profound impact resonating within each cautiously constructed phrase. Within the depths with this emotional assessment, we shall discover the book is central harmonies, analyze its enthralling publishing fashion, and submit ourselves to the profound resonance that echoes in the depths of readers souls.

https://rehabmart.x-shops.com/data/browse/HomePages/Federal%20Impeachment%20Process%20A%20Constitutional%20And%20Historical%20Analysis.pdf

Table of Contents Wiring For 1929 Model A

1. Understanding the eBook Wiring For 1929 Model A
    - The Rise of Digital Reading Wiring For 1929 Model A
    - Advantages of eBooks Over Traditional Books
2. Identifying Wiring For 1929 Model A
    - Exploring Different Genres
    - Considering Fiction vs. Non-Fiction
    - Determining Your Reading Goals
3. Choosing the Right eBook Platform
    - Popular eBook Platforms
    - Features to Look for in an Wiring For 1929 Model A
    - User-Friendly Interface
4. Exploring eBook Recommendations from Wiring For 1929 Model A

    - Personalized Recommendations
    - Wiring For 1929 Model A User Reviews and Ratings
    - Wiring For 1929 Model A and Bestseller Lists
5. Accessing Wiring For 1929 Model A Free and Paid eBooks
    - Wiring For 1929 Model A Public Domain eBooks
    - Wiring For 1929 Model A eBook Subscription Services
    - Wiring For 1929 Model A Budget-Friendly Options
6. Navigating Wiring For 1929 Model A eBook Formats
    - ePub, PDF, MOBI, and More
    - Wiring For 1929 Model A Compatibility with Devices
    - Wiring For 1929 Model A Enhanced eBook Features
7. Enhancing Your Reading Experience
    - Adjustable Fonts and Text Sizes of Wiring For 1929 Model A
    - Highlighting and Note-Taking Wiring For 1929 Model A
    - Interactive Elements Wiring For 1929 Model A
8. Staying Engaged with Wiring For 1929 Model A
    - Joining Online Reading Communities
    - Participating in Virtual Book Clubs
    - Following Authors and Publishers Wiring For 1929 Model A
9. Balancing eBooks and Physical Books Wiring For 1929 Model A
    - Benefits of a Digital Library
    - Creating a Diverse Reading Collection Wiring For 1929 Model A
10. Overcoming Reading Challenges
    - Dealing with Digital Eye Strain
    - Minimizing Distractions
    - Managing Screen Time
11. Cultivating a Reading Routine Wiring For 1929 Model A
    - Setting Reading Goals Wiring For 1929 Model A
    - Carving Out Dedicated Reading Time
12. Sourcing Reliable Information of Wiring For 1929 Model A

    - Fact-Checking eBook Content of Wiring For 1929 Model A
    - Distinguishing Credible Sources
13. Promoting Lifelong Learning
    - Utilizing eBooks for Skill Development
    - Exploring Educational eBooks
14. Embracing eBook Trends
    - Integration of Multimedia Elements
    - Interactive and Gamified eBooks

Wiring For 1929 Model A Introduction

Free PDF Books and Manuals for Download: Unlocking Knowledge at Your Fingertips In todays fast-paced digital age, obtaining valuable knowledge has become easier than ever. Thanks to the internet, a vast array of books and manuals are now available for free download in PDF format. Whether you are a student, professional, or simply an avid reader, this treasure trove of downloadable resources offers a wealth of information, conveniently accessible anytime, anywhere. The advent of online libraries and platforms dedicated to sharing knowledge has revolutionized the way we consume information. No longer confined to physical libraries or bookstores, readers can now access an extensive collection of digital books and manuals with just a few clicks. These resources, available in PDF, Microsoft Word, and PowerPoint formats, cater to a wide range of interests, including literature, technology, science, history, and much more. One notable platform where you can explore and download free Wiring For 1929 Model A PDF books and manuals is the internets largest free library. Hosted online, this catalog compiles a vast assortment of documents, making it a veritable goldmine of knowledge. With its easy-to-use website interface and customizable PDF generator, this platform offers a user-friendly experience, allowing individuals to effortlessly navigate and access the information they seek. The availability of free PDF books and manuals on this platform demonstrates its commitment to democratizing education and empowering individuals with the tools needed to succeed in their chosen fields. It allows anyone, regardless of their background or financial limitations, to expand their horizons and gain insights from experts in various disciplines. One of the most significant advantages of downloading PDF books and manuals lies in their portability. Unlike physical copies, digital books can be stored and carried on a single device, such as a tablet or smartphone, saving valuable space and weight. This convenience makes it possible for readers to have their entire library at their fingertips, whether they are commuting, traveling, or simply enjoying a lazy afternoon at home. Additionally, digital files are easily searchable, enabling readers to locate specific information within seconds. With a few keystrokes, users can search for keywords, topics, or phrases, making research and finding relevant information a breeze. This efficiency

saves time and effort, streamlining the learning process and allowing individuals to focus on extracting the information they need. Furthermore, the availability of free PDF books and manuals fosters a culture of continuous learning. By removing financial barriers, more people can access educational resources and pursue lifelong learning, contributing to personal growth and professional development. This democratization of knowledge promotes intellectual curiosity and empowers individuals to become lifelong learners, promoting progress and innovation in various fields. It is worth noting that while accessing free Wiring For 1929 Model A PDF books and manuals is convenient and cost-effective, it is vital to respect copyright laws and intellectual property rights. Platforms offering free downloads often operate within legal boundaries, ensuring that the materials they provide are either in the public domain or authorized for distribution. By adhering to copyright laws, users can enjoy the benefits of free access to knowledge while supporting the authors and publishers who make these resources available. In conclusion, the availability of Wiring For 1929 Model A free PDF books and manuals for download has revolutionized the way we access and consume knowledge. With just a few clicks, individuals can explore a vast collection of resources across different disciplines, all free of charge. This accessibility empowers individuals to become lifelong learners, contributing to personal growth, professional development, and the advancement of society as a whole. So why not unlock a world of knowledge today? Start exploring the vast sea of free PDF books and manuals waiting to be discovered right at your fingertips.

FAQs About Wiring For 1929 Model A Books

1. Where can I buy Wiring For 1929 Model A books? Bookstores: Physical bookstores like Barnes & Noble, Waterstones, and independent local stores. Online Retailers: Amazon, Book Depository, and various online bookstores offer a wide range of books in physical and digital formats.
2. What are the different book formats available? Hardcover: Sturdy and durable, usually more expensive. Paperback: Cheaper, lighter, and more portable than hardcovers. E-books: Digital books available for e-readers like Kindle or software like Apple Books, Kindle, and Google Play Books.
3. How do I choose a Wiring For 1929 Model A book to read? Genres: Consider the genre you enjoy (fiction, non-fiction, mystery, sci-fi, etc.). Recommendations: Ask friends, join book clubs, or explore online reviews and recommendations. Author: If you like a particular author, you might enjoy more of their work.
4. How do I take care of Wiring For 1929 Model A books? Storage: Keep them away from direct sunlight and in a dry environment. Handling: Avoid folding pages, use bookmarks, and handle them with clean hands. Cleaning: Gently dust

the covers and pages occasionally.

5. Can I borrow books without buying them? Public Libraries: Local libraries offer a wide range of books for borrowing. Book Swaps: Community book exchanges or online platforms where people exchange books.
6. How can I track my reading progress or manage my book collection? Book Tracking Apps: Goodreads, LibraryThing, and Book Catalogue are popular apps for tracking your reading progress and managing book collections. Spreadsheets: You can create your own spreadsheet to track books read, ratings, and other details.
7. What are Wiring For 1929 Model A audiobooks, and where can I find them? Audiobooks: Audio recordings of books, perfect for listening while commuting or multitasking. Platforms: Audible, LibriVox, and Google Play Books offer a wide selection of audiobooks.
8. How do I support authors or the book industry? Buy Books: Purchase books from authors or independent bookstores. Reviews: Leave reviews on platforms like Goodreads or Amazon. Promotion: Share your favorite books on social media or recommend them to friends.
9. Are there book clubs or reading communities I can join? Local Clubs: Check for local book clubs in libraries or community centers. Online Communities: Platforms like Goodreads have virtual book clubs and discussion groups.
10. Can I read Wiring For 1929 Model A books for free? Public Domain Books: Many classic books are available for free as theyre in the public domain. Free E-books: Some websites offer free e-books legally, like Project Gutenberg or Open Library.

Find Wiring For 1929 Model A :

federal impeachment process a constitutional and historical analysis
~~romeo and juliet study guide vocabulary~~
takeuchi tb070 compact excavator service repair manual
iterative methods for calculating static fields and wave scattering by small bodies
~~romeo and juliet study guide key~~
federal home loan banks in the housing finance system
ballade en feacuteeacuterie
~~firm micro economic planning action~~
read mosby s guide to physical examination 7th edition
1992 toyota pickup factory service manual

audi a6 manual transmission fluid
topcon gts 300 manual
volvo penta sp a mt manual
key note recognition
bosch alternator circuit diagram

Wiring For 1929 Model A :

le labyrinthe tome 3 le rema de mortel 3 pdf ftp bonide - Jan 02 2022

le labyrinthe tome 03 le remède mortel 3 amazon fr - Oct 23 2023
web le labyrinthe tome 03 le remède mortel 3 broché livre grand format 5 juin 2014 le labyrinthe tome 03 le remède mortel 3 broché livre grand format 5 juin
le labyrinthe tome 3 le rema de mortel 3 2023 - Jun 07 2022
web le labyrinthe tome 3 le rema de mortel 3 corps du droit français ou recueil complet des lois décrets arrêtés ordonnances sénatus consultes instructions ministérielles
le labyrinthe tome 3 le rema de mortel 3 book - Mar 16 2023
web le labyrinthe tome 3 le rema de mortel 3 defeat and division may 01 2021 defeat and division launches a definitive new account of france in the second world war in
le labyrinthe tome 3 le rema de mortel 3 pdf - Mar 04 2022

le labyrinthe tome 3 le remède mortel 3 abebooks france - Feb 15 2023
web feb 14 2018 toutes les informations sur le labyrinthe 3 le remède mortel film réalisé par wes ball avec dylan o brien et kaya scodelario sorti en 2018 synopsis
livre d occasion dashner james le labyrinthe tome 03 - Dec 13 2022
web utilisateur le labyrinthe le remède mortel tous publics 2018 sf action 2h 22m thomas et les blocards s engagent dans une ultime mission plus dangereuse que
downloadable free pdfs le labyrinthe tome 3 le rema de - Feb 03 2022

l épreuve tome 3 le remède mortel james - Jun 19 2023
web le labyrinthe tome 3 le rema de mortel 3 preuves des libertez de l église gallicane feb 07 2023 somme théologique de s

thomas d aquin may 30 2022 les oeuvres de

le labyrinthe 3 le remède mortel critique à enterrer - Jan 14 2023

web le labyrinthe 3 le remède mortel bande annonce vf 2018 découvrez la bande annonce du film le labyrinthe 3 le remède mortel réalisé par wes ball dans ce

pdf le labyrinthe tome 3 le rema de mortel 3 - Apr 05 2022

web le labyrinthe 3 le remède mortel est le dernier volet de la saga le labyrinthe adapté des romans de james dashner il sort au cinéma le 7 février 2018

le labyrinthe 3 le remède mortel bande annonce photos - Dec 01 2021

le labyrinthe 3 le remède mortel on vous explique - Jul 20 2023

web le labyrinthe 3 le remède mortel je pense pouvoir dire que c st de loin mon tome préféré sur les 3 comme les précèdent se tome est plein d aventures de

le labyrinthe tome 3 l épreuve tome 3 le remède mortel fnac - Aug 21 2023

web le labyrinthe tome 03 le remède mortel ebook written by james dashner read this book using google play books app on your pc android ios devices download for

le labyrinthe 3 le remède mortel bande annonce vf 2018 - Sep 10 2022

web le labyrinthe tome 3 le rema de mortel 3 downloaded from files climagic org by guest moreno jordan le labyrinthe the wicked string 01 lulu com troisième volet de

le labyrinthe tome 03 le remède mortel 3 - Sep 22 2023

web oct 9 2015 le labyrinthe le labyrinthe tome 3 l épreuve tome 3 le remède mortel james dashner guillaume fournier pocket jeunesse des milliers de livres

le labyrinthe tome 3 le rema de mortel 3 pdf uniport edu - Jul 08 2022

web labyrinthe tome 3 le rema de mortel 3 but end up in infectious downloads rather than enjoying a good book with a cup of coffee in the afternoon instead they juggled with

le labyrinthe tome 03 le remède mortel google play - May 18 2023

web le labyrinthe tome 3 le remède mortel 3 de dashner james sur abebooks fr isbn 10 2266200143 isbn 13 9782266200141 pocket jeunesse 2014 couverture souple

le labyrinthe tome 3 le rema de mortel 3 full pdf - Nov 12 2022

web jun 19 2023 le labyrinthe tome 3 le rema de mortel 3 3 13 downloaded from uniport edu ng on june 19 2023 by guest university of california press s mission to seek

le labyrinthe tome 03 le remède mortel james dashner - Apr 17 2023
web découvrez livre d occasion dashner james le labyrinthe tome 03 le remède mortel 3 livre d occasion au meilleur prix sur le site veepee les plus grandes
le labyrinthe 3 le remède mortel ecranlarge - Oct 11 2022
web oct 21 2023 assault of noise and distractions however located within the musical pages of le labyrinthe tome 3 le rema de mortel 3 a fascinating perform of fictional beauty
le labyrinthe tome 3 le rema de mortel 3 2022 files climagic - May 06 2022
web cette première partie du tome 3 revient sur le moindre détail de la création de kingdom hearts iii son équipe les décisions qui l ont façonné et même l histoire de pixar qui est
le labyrinthe le remede mortel 2018 tokyvideo - Aug 09 2022
web le labyrinthe tome 3 le rema de mortel 3 geotechnics for developing africa oct 08 2022 the proceedings represent a valuable reference on geotechnical problems peculiar
sansui au 519 integrated stereo amplifier manual hifi engine - Nov 12 2022
web nov 4 2011 sansui au 719 recap and restoration by pete mac november 2 2011 in stereo amplifiers pre amps share followers 0 1 2 3 4 next page 1 of 4 pete mac
sansui au 719 hifi wiki com - May 18 2023
web specifications power output 70 watts per channel into 8Ω stereo frequency response 20hz to 20khz total harmonic distortion 0 008 damping factor 100 input sensitivity
sansui au 719 specs manual images hifi - Jun 19 2023
web you are bidding on a sansui au 719 integrated amplifier pro serviced fully recapped with banana connectors in backexcellent cosmetic conditionpro
sansui au 719 integrated amplifier works perfect - Jan 02 2022

upgrade from a sansui au 719 stereophile com - Sep 22 2023
web dec 14 2022 extended bass without that artificial boom a deep and clear midrange and nice resolution in the treble the au 719 does not have any pre out capability as on the
sansui au 719 owners manual free audio service - Feb 15 2023
web description the au 717 amplifier incorporates an advanced design feature which has extremely low inherent transient intermodulation distortion enabling negative feedback
sansui au 719 recap and restoration stereo amplifiers pre - May 06 2022

sansui au 719 stereo integrated amplifier fully - Mar 16 2023
web sansui au 719 au 717 bundle reverb price drop sansui au x111 mos vintage used poor 888 88 193 88 price drop 695 add to cart price drop sansui au g99x
sansui au 719 stereo integrated amplifier manual hifi - Oct 23 2023
web may 23 2018 may 28 2018 3 43pm commsysman offline last seen 1 year 11 months ago joined apr 4 2006 11 33am amplifiers i recommend that you get the musical
sansui au 719 stereo integrated amplifier initial evaluation and - Jan 14 2023
web with this manual you ll learn how to set up and use your sansui au 719 the manual describes functions of au 719 tells how to use it correctly and includes instructions on
sansui au 719 au 717 bundle reverb - Sep 10 2022
web sansui au 819 stereo integrated amplifier manual hifi engine manual library sansui sansui au 819 stereo integrated amplifier 1979 2 reviews specifications power
manual au719 sansui free download borrow and - Jun 07 2022

sansui au 719 audiogon bluebook - Apr 17 2023
web specifications sansui au 719 specifications power output 90 watts per channel into 8Ω stereo frequency response 10hz to 20khz total harmonic distortion 0 015 damping
used sansui au 719 integrated amplifiers for sale - Aug 21 2023
web sansui au 719 pricing information on audiogon the high end audio community audiogon the world s largest high end audio community forum au 719 introduced 1979
sansui au 719 integrated amplifier works perfect - Dec 13 2022
web jul 22 2021 manual au719 sansui collection manuals contributions manuals additional collections language english manual au719 sansui addeddate 2021 07
sansui au 719 owner s manual immediate download - Jul 08 2022
web you are bidding on a sansui au 719 integrated amplifier pro serviced fully recapped with banana connectors in back excellent cosmetic condition pro
sansui au 719 audiokarma home audio stereo discussion - Feb 03 2022

sansui au d9 integrated stereo amplifier manual hifi engine - Apr 05 2022

sansui au 819 stereo integrated amplifier manual hifi engine - Mar 04 2022

sansui au 719 integrated amplifiers audio high store com - Oct 11 2022
web specifications power output 95 watts per channel into 8Ω stereo frequency response 10hz to 20khz total harmonic distortion 0 005 damping factor 150
sansui au 717 stereo integrated amplifier manual hifi engine - Aug 09 2022
web apr 28 2011 i need your opinion on getting au 719 before buying it from a friend i am currently having a sansui au 777 and very satisfied with the sound and very eager to
sansui au 717 vs au 719 audiokarma home audio - Jul 20 2023
web jul 30 2023 evaluation prior to starting restoration of this vintage stereo integrated amplifier identification of issues and their repair is covered here
army m16 qualify paper targets hanonmckendry com - Apr 30 2022
web army m16 qualify paper targets reviewing army m16 qualify paper targets unlocking the spellbinding force of linguistics in a fast paced world fueled by information and interconnectivity the spellbinding force of linguistics has acquired newfound prominence its capacity to evoke emotions stimulate contemplation and
m16a1 paper target qualification targets inc - Jul 14 2023
web qualification targets inc product m16a1 paper target is a 25 meter m16a1 target for alternate course c m 16 alt c nsn 6920 01 167 1398 printed with black ink on 17 1 2 x 23 paper for large or custom orders please call 866 498 8228
army m16 qualify paper targets secure4 khronos - Aug 03 2022
web jun 25 2023 army m16 qualify paper targets as one of the predominant operational sellers here will wholly be paired with by the best options to review if you collaborator tradition such a referred army
army rifle qualification standards paper targets - Nov 06 2022
web join the mailing list i m trying to figure out the scores for the army s marksmanship test headquarters department of the army file type pdf army m16 qualify paper targets the army has multiple m16 m4 qualification tables and with alternate table options depending on the type of range facilities you have available required fields are
m 16 weapons qualification 25 meter alternate course radford university - Jun 13 2023
web m 16 weapons qualification 25 meter alternate course rifle range safety briefing 1 explain the far right and far left safety limits shooters never fire or point their rifles outside the limits of these limits 2
army m16 qualify paper targets 2023 hanonmckendry - Jun 01 2022
web the enigmatic realm of army m16 qualify paper targets unleashing the language is inner magic in a fast paced digital era

where connections and knowledge intertwine the enigmatic realm of language reveals its inherent magic

the army s realistic new rifle qualification we are the mighty - Sep 16 2023

web oct 13 2022 a soldier of the 25th infantry division engages targets from the kneeling supported position u s army whereas commanders could previously dictate whether or not their soldiers could shoot slick without their body armor and helmet the new rifle qualification requires soldiers to wear them

army m16 qualify paper targets pdf wiki lwn - Sep 04 2022

web reviewing army m16 qualify paper targets unlocking the spellbinding force of linguistics in a fast paced world fueled by information and interconnectivity the spellbinding force of linguistics has acquired newfound prominence

army m16 qualify paper targets wordpress com - Mar 10 2023

web we would like to show you a description here but the site won t allow us

army m16 qualify paper targets help environment harvard edu - Jul 02 2022

web way to get those all we provide army m16 qualify paper targets and numerous book collections from fictions to scientific research in any way in the midst of them is this army m16 qualify paper targets that can be your partner u s rifle caliber 30 m1 united states department of the army 1965 the ultimate sniper major john plaster

training for the army s new m4 qualification - Jan 08 2023

web the new army marksmanship m4a1 carbine qualification course of fire is a more complex and realistic evaluation of lethality the integration of barriers unprompted reloading and firing position transitions provide leadership with a challenging task for training soldiers company level rifle marksmanship programs

army m16 qualify paper targets free epub architypes - Oct 05 2022

web army m16 qualify paper targets introduction army m16 qualify paper targets pdf recommended alternate qualification courses for the m16 rifle recommended alternate qualification courses for the m16 rifle colt m16 rifle trainer s guide rifle marksmanship m16 m4 series weapons fm 3 22 9 m 16 rifle procurement program m16 m4

army m16 qualify paper targets orientation sutd edu - Feb 09 2023

web army m16 qualify paper targets i understand what you are saying the thing that aggravates me is nbc isn t required to qualify on the m16 m4 m9 here we are with the outdated version of the m249 qua lification still firing the old way cib was proposed by brigadier general lesley mcnair who was commanding general of the u s army

army rifle qualification operation military kids - Apr 11 2023

web apr 23 2023 the m4 m4a1 is a standard rifle for military branches also soldiers need to qualify with all the weapons assigned to them based on their individual mos or job in the army the army qualification courses are located at local firing ranges on army bases the army has training ranges designed for weapons qualification and training

new army weapons qualification target order army military - Oct 17 2023
web m16a1 paper target qualification targets inc soldiers must hit 23 targets out of 40 to qualify the new army marksmanship m4a1 carbine qualification course of fire is a more complex and realistic evaluation soldiers are still required to hit 23 of the 40 targets in order to qualify
army m16 qualify paper targets pdf 2023 support ortax - May 12 2023
web army m16 qualify paper targets pdf pages 2 26 army m16 qualify paper targets pdf upload caliva j robertson 2 26 downloaded from support ortax org on september 14 2023 by caliva j robertson across the spectrum of conflict content discussions include principles tactics techniques procedures terms and symbols that
army faces payout over death bangkok post - Feb 26 2022
web 1 day ago writing on the crcf s fan page on facebook the court stated that the rta took full responsibility for chaiyaphum s death and had to pay 120 000 baht for his funeral ceremony a 50 000 baht lawyer
army m4 qualification standards paper targets army military - Dec 07 2022
web at minimum recruits must shoot 23 out of 43 target to qualify on the m4 or m16 rifle and graduate from basic training one point is allowed for each round impacting within the scoring space maximum of 7 points m249 or 9 points m60 m240b for
m16a1 targets qualification targets inc - Aug 15 2023
web m16a1 m16a1 sf paper targets for alt course c and m16a2 for 25 meter zeroing nsn 6920 01 167 1398 nsn 6920 01 253 4005 nsn 6920 01 167 1391 display
army m16 qualify paper targets htaccess guide - Mar 30 2022
web army m16 qualify paper targets if you ally craving such a referred army m16 qualify paper targets book that will allow you worth get the no question best seller from us currently from several preferred authors