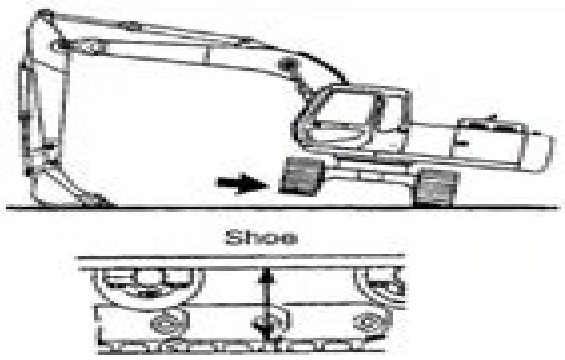


**Figure 2—15** BD003318A
**Track Tension Specification**

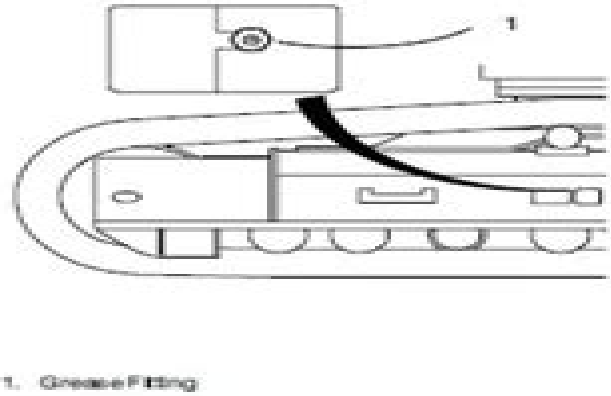


**Figure 2—16** CD000587
**Track Tension Adjustment**

## Track Tension Adjustment

Dirt or sand gets caught in the track and tightens the track tension. Check the under carriage during each stop and remove dirt or sand before it causes damage.

Different working conditions cause the pins and bushings around the lower to wear at various rates. When traveling for long distances it is necessary to periodically run in reverse to avoid excessive wear on one side of the track. Tighten the track for operations on hard ground. Loosen it for soft or wet ground operations. Track tension should be checked regularly and kept within specification.

1. Properly park machine on firm level surface.
2. Swing the upper over the side at a right angle of the traveling direction and lower the attachment to the ground. Raise the machine off the ground at a 15° angle. Refer to Figure 2—15.
3. Check the gap between the track roller mounting surface and the top of the track shoe. The gap should be 11 to 11.8 in (280—300mm). Refer to Figure 2—15.
4. To tighten the track, add grease through the grease fitting. Add grease until the idle wheel center can no longer be seen and track is within specification. Refer to Figure 2—16.
5. To loosen the track, slowly open the grease fitting a little at a time, expel some grease and stop. Repeat until track is within specification.

eRepairinfo.com
Watermark only on this sample

**WARNING**

**Open the grease fitting slowly. The interior of the cylinder is highly pressurized. Grease will spurt out or the plug may fly off if the valve is opened too fast.**

**Note: Proper track tension is important. Wear can result from an improperly adjusted track. If track tension is too loose, it will cause excessive wear to the drive sprocket and track rail. If track tension is too tight it causes the track rail to wear into the rollers and drive sprocket. If track tension can not be adjusted to specification, mechanical repair is needed. Contact your distributor's service department.**

# Link Belt 4300 Operators Manual

DP Hallahan

**Link Belt 4300 Operators Manual:**

**Cost Estimating Guide for Road Construction** United States. Forest Service. Intermountain Region,2002 ,

**Michigan Roads and Construction** ,1989-07 Regional Industrial Buying Guide ,1996 Moody's Industrial Manual ,1963 **The Logger and Lumberman Magazine** ,1990 **A Guide to Small Business Management** Abner Thomas Hollingsworth,Herbert H. Hand,1979 *Printers' Ink* ,1916 California Builder & Engineer ,2000 **Printers' Ink; the ... Magazine of Advertising, Management and Sales** ,1916 **Iron Trade and Western Machinist** ,1928

**Moody's Manual of Investments, American and Foreign; Banks, Insurance Companies, Investment Trusts, Real Estate, Finance and Credit Companies** ,1944 Advertising and Selling Fortnightly ,1925 **Hendricks' Commercial Register of the United States for Buyers and Sellers** ,1915 **The Official Railway Guide** ,2010

Advertising Fortnightly ,1925 Sales Management ,1924 Iron Trade Review ,1928 Official Railway Guide ,1984-06 *Monthly Catalogue, United States Public Documents* ,1994

Immerse yourself in heartwarming tales of love and emotion with is touching creation, Tender Moments: **Link Belt 4300 Operators Manual** . This emotionally charged ebook, available for download in a PDF format ( *), is a celebration of love in all its forms. Download now and let the warmth of these stories envelop your heart.

https://rehabmart.x-shops.com/About/Resources/index.jsp/lac_aux_sortileges_le_ne.pdf

**Table of Contents Link Belt 4300 Operators Manual**


1. Understanding the eBook Link Belt 4300 Operators Manual
    - The Rise of Digital Reading Link Belt 4300 Operators Manual
    - Advantages of eBooks Over Traditional Books
2. Identifying Link Belt 4300 Operators Manual
    - Exploring Different Genres
    - Considering Fiction vs. Non-Fiction
    - Determining Your Reading Goals
3. Choosing the Right eBook Platform
    - Popular eBook Platforms
    - Features to Look for in an Link Belt 4300 Operators Manual
    - User-Friendly Interface
4. Exploring eBook Recommendations from Link Belt 4300 Operators Manual
    - Personalized Recommendations
    - Link Belt 4300 Operators Manual User Reviews and Ratings
    - Link Belt 4300 Operators Manual and Bestseller Lists
5. Accessing Link Belt 4300 Operators Manual Free and Paid eBooks
    - Link Belt 4300 Operators Manual Public Domain eBooks
    - Link Belt 4300 Operators Manual eBook Subscription Services
    - Link Belt 4300 Operators Manual Budget-Friendly Options
6. Navigating Link Belt 4300 Operators Manual eBook Formats

- ePub, PDF, MOBI, and More
- Link Belt 4300 Operators Manual Compatibility with Devices
- Link Belt 4300 Operators Manual Enhanced eBook Features

7. Enhancing Your Reading Experience
    - Adjustable Fonts and Text Sizes of Link Belt 4300 Operators Manual
    - Highlighting and Note-Taking Link Belt 4300 Operators Manual
    - Interactive Elements Link Belt 4300 Operators Manual
8. Staying Engaged with Link Belt 4300 Operators Manual
    - Joining Online Reading Communities
    - Participating in Virtual Book Clubs
    - Following Authors and Publishers Link Belt 4300 Operators Manual
9. Balancing eBooks and Physical Books Link Belt 4300 Operators Manual
    - Benefits of a Digital Library
    - Creating a Diverse Reading Collection Link Belt 4300 Operators Manual
10. Overcoming Reading Challenges
    - Dealing with Digital Eye Strain
    - Minimizing Distractions
    - Managing Screen Time
11. Cultivating a Reading Routine Link Belt 4300 Operators Manual
    - Setting Reading Goals Link Belt 4300 Operators Manual
    - Carving Out Dedicated Reading Time
12. Sourcing Reliable Information of Link Belt 4300 Operators Manual
    - Fact-Checking eBook Content of Link Belt 4300 Operators Manual
    - Distinguishing Credible Sources
13. Promoting Lifelong Learning
    - Utilizing eBooks for Skill Development
    - Exploring Educational eBooks
14. Embracing eBook Trends
    - Integration of Multimedia Elements
    - Interactive and Gamified eBooks

## Link Belt 4300 Operators Manual Introduction

Free PDF Books and Manuals for Download: Unlocking Knowledge at Your Fingertips In todays fast-paced digital age, obtaining valuable knowledge has become easier than ever. Thanks to the internet, a vast array of books and manuals are now available for free download in PDF format. Whether you are a student, professional, or simply an avid reader, this treasure trove of downloadable resources offers a wealth of information, conveniently accessible anytime, anywhere. The advent of online libraries and platforms dedicated to sharing knowledge has revolutionized the way we consume information. No longer confined to physical libraries or bookstores, readers can now access an extensive collection of digital books and manuals with just a few clicks. These resources, available in PDF, Microsoft Word, and PowerPoint formats, cater to a wide range of interests, including literature, technology, science, history, and much more. One notable platform where you can explore and download free Link Belt 4300 Operators Manual PDF books and manuals is the internets largest free library. Hosted online, this catalog compiles a vast assortment of documents, making it a veritable goldmine of knowledge. With its easy-to-use website interface and customizable PDF generator, this platform offers a user-friendly experience, allowing individuals to effortlessly navigate and access the information they seek. The availability of free PDF books and manuals on this platform demonstrates its commitment to democratizing education and empowering individuals with the tools needed to succeed in their chosen fields. It allows anyone, regardless of their background or financial limitations, to expand their horizons and gain insights from experts in various disciplines. One of the most significant advantages of downloading PDF books and manuals lies in their portability. Unlike physical copies, digital books can be stored and carried on a single device, such as a tablet or smartphone, saving valuable space and weight. This convenience makes it possible for readers to have their entire library at their fingertips, whether they are commuting, traveling, or simply enjoying a lazy afternoon at home. Additionally, digital files are easily searchable, enabling readers to locate specific information within seconds. With a few keystrokes, users can search for keywords, topics, or phrases, making research and finding relevant information a breeze. This efficiency saves time and effort, streamlining the learning process and allowing individuals to focus on extracting the information they need. Furthermore, the availability of free PDF books and manuals fosters a culture of continuous learning. By removing financial barriers, more people can access educational resources and pursue lifelong learning, contributing to personal growth and professional development. This democratization of knowledge promotes intellectual curiosity and empowers individuals to become lifelong learners, promoting progress and innovation in various fields. It is worth noting that while accessing free Link Belt 4300 Operators Manual PDF books and manuals is convenient and cost-effective, it is vital to respect copyright laws and intellectual property rights. Platforms offering free downloads often operate within legal boundaries, ensuring that the materials they provide are either in the public domain or authorized for distribution. By adhering to copyright laws, users can enjoy the benefits of free access to knowledge while supporting the authors and

publishers who make these resources available. In conclusion, the availability of Link Belt 4300 Operators Manual free PDF books and manuals for download has revolutionized the way we access and consume knowledge. With just a few clicks, individuals can explore a vast collection of resources across different disciplines, all free of charge. This accessibility empowers individuals to become lifelong learners, contributing to personal growth, professional development, and the advancement of society as a whole. So why not unlock a world of knowledge today? Start exploring the vast sea of free PDF books and manuals waiting to be discovered right at your fingertips.

**FAQs About Link Belt 4300 Operators Manual Books**

How do I know which eBook platform is the best for me? Finding the best eBook platform depends on your reading preferences and device compatibility. Research different platforms, read user reviews, and explore their features before making a choice. Are free eBooks of good quality? Yes, many reputable platforms offer high-quality free eBooks, including classics and public domain works. However, make sure to verify the source to ensure the eBook credibility. Can I read eBooks without an eReader? Absolutely! Most eBook platforms offer webbased readers or mobile apps that allow you to read eBooks on your computer, tablet, or smartphone. How do I avoid digital eye strain while reading eBooks? To prevent digital eye strain, take regular breaks, adjust the font size and background color, and ensure proper lighting while reading eBooks. What the advantage of interactive eBooks? Interactive eBooks incorporate multimedia elements, quizzes, and activities, enhancing the reader engagement and providing a more immersive learning experience. Link Belt 4300 Operators Manual is one of the best book in our library for free trial. We provide copy of Link Belt 4300 Operators Manual in digital format, so the resources that you find are reliable. There are also many Ebooks of related with Link Belt 4300 Operators Manual. Where to download Link Belt 4300 Operators Manual online for free? Are you looking for Link Belt 4300 Operators Manual PDF? This is definitely going to save you time and cash in something you should think about. If you trying to find then search around for online. Without a doubt there are numerous these available and many of them have the freedom. However without doubt you receive whatever you purchase. An alternate way to get ideas is always to check another Link Belt 4300 Operators Manual. This method for see exactly what may be included and adopt these ideas to your book. This site will almost certainly help you save time and effort, money and stress. If you are looking for free books then you really should consider finding to assist you try this. Several of Link Belt 4300 Operators Manual are for sale to free while some are payable. If you arent sure if the books you would like to download works with for usage along with your computer, it is possible to download free trials. The free guides make it easy for someone to free access online library for download books to your device. You can get free download on free trial for lots of books categories. Our library is the biggest of these that have literally hundreds of thousands of

different products categories represented. You will also see that there are specific sites catered to different product types or categories, brands or niches related with Link Belt 4300 Operators Manual. So depending on what exactly you are searching, you will be able to choose e books to suit your own need. Need to access completely for Campbell Biology Seventh Edition book? Access Ebook without any digging. And by having access to our ebook online or by storing it on your computer, you have convenient answers with Link Belt 4300 Operators Manual To get started finding Link Belt 4300 Operators Manual, you are right to find our website which has a comprehensive collection of books online. Our library is the biggest of these that have literally hundreds of thousands of different products represented. You will also see that there are specific sites catered to different categories or niches related with Link Belt 4300 Operators Manual So depending on what exactly you are searching, you will be able tochoose ebook to suit your own need. Thank you for reading Link Belt 4300 Operators Manual. Maybe you have knowledge that, people have search numerous times for their favorite readings like this Link Belt 4300 Operators Manual, but end up in harmful downloads. Rather than reading a good book with a cup of coffee in the afternoon, instead they juggled with some harmful bugs inside their laptop. Link Belt 4300 Operators Manual is available in our book collection an online access to it is set as public so you can download it instantly. Our digital library spans in multiple locations, allowing you to get the most less latency time to download any of our books like this one. Merely said, Link Belt 4300 Operators Manual is universally compatible with any devices to read.

**Find Link Belt 4300 Operators Manual :**

lac aux sortileges le ne
**manual repair chrysler shadow 87**
land use in a nutshell
**2004 bmw x5 owner manual**
**6 hp johnson outboard parts**
~~how to become a problem solver~~
*here come the clowns*
**70 recettes prparer lavance**
**trane ysc120a technical manual**
porsche 911 carrera 2006 owner manual
*takeuchi tb035 manual*
**n2 chemical engineering intec college**
aquasmart repair manual

**mini cooper service manual 2015 mini c**
blue pelican math teacher version second semester test

**Link Belt 4300 Operators Manual :**

necesidad de crecimiento personal notas sobre las 14 necesidades de - Oct 10 2023
web siendo en la cúspide dónde se podría englobar la necesidad de crecimiento personal descrita en el modelo teórico de henderson que ocupa este volumen y engloba diversos conceptos
**necesidad de crecimiento personal notas sobre las 14 necesidades de** - Aug 08 2023
web necesidad de crecimiento personal notas sobre las 14 necesidades de virginia henderson volume 12 garcia sanchez valladares m del pilar moreno zapardiel cristina molina ruiz diego molina ruiz diego flores reyes alba amazon es libros
*necesidad de crecimiento personal notas sobre las pdf* - Feb 19 2022
web oct 3 2023 necesidad de crecimiento personal notas sobre las 1 10 downloaded from uniport edu ng on october 3 2023 by guest necesidad de crecimiento personal notas sobre las as recognized adventure as capably as experience practically lesson amusement as with ease as bargain can be
*necesidad de crecimiento personal notas sobre las* - May 25 2022
web necesidad de crecimiento personal notas sobre las 1 necesidad de crecimiento personal notas sobre las necesidad de entretenimiento estilos de aprendizaje a la luz de la neurociencia necesidad de crecimiento personal técnicas de venta comv0108 cuál es la nota de los cipotes psicopedagogía de la diversidad en el aula familia y
*necesidad de crecimiento personal notas sobre las pdf* - Mar 23 2022
web oct 2 2023 this necesidad de crecimiento personal notas sobre las but end going on in harmful downloads rather than enjoying a fine ebook behind a mug of coffee in the afternoon then again they juggled when some harmful virus inside their computer necesidad de crecimiento personal notas sobre las is affable in
**necesidad de crecimiento personal notas sobre las download** - Jun 06 2023
web crecimiento personal pertenece a las de orden superior al ser totalmente necesario que las que le preceden est n satisfechas y as poder llegar a centrarnos en la persona que est a nuestro cargo es decir el paciente para ponernos en antecedentes sobre la teor a de virginia henderson
necesidad de crecimiento personal notas sobre las pdf - Nov 30 2022
web necesidad de crecimiento personal notas sobre las 5 5 procesos como el de atenci n percepci n vigilancia etc dichos procesos est n ntimamente relacionados con el sue o y el descanso por tanto la necesidad de sue o y descanso es un pilar b sico para que el ser humano pueda desenvolverse en su medio con normalidad y para que su

**necesidad de crecimiento personal notas sobre las 14 n** - Jul 07 2023
web la tarea que ocupa el presente libro consiste en desarrollar desde un punto de vista multidis necesidad de crecimiento personal notas sobre las 14 necesidades de virginia henderson by m del pilar garcia sanchez valladares goodreads
*necesidad de crecimiento personal notas sobre las 2023* - Oct 30 2022
web necesidad de crecimiento personal notas sobre las necesidad de entretenimiento prevención en dificultades del desarrollo y del aprendizaje psicopedagogía de la diversidad en el aula técnicas de venta comt0112 notas revista de información y análisis 2003 la nota notas para el desarrollo personal y empresarial
*necesidad de crecimiento personal notas sobre las 14 necesidades de* - Sep 09 2023
web necesidad de crecimiento personal notas sobre las 14 necesidades de ia henderson volume 12 garcia sanchez valladares m del pilar moreno zapardiel cristina molina ruiz diego amazon com tr
**crecimiento personal tienes necesidades o necesidades** - Feb 02 2023
web nov 15 2021 así como sus necesidades físicas básicas por ejemplo comida agua refugio deben satisfacerse para garantizar su supervivencia y crecimiento físicos también debe satisfacerse otro conjunto de necesidades para garantizar su supervivencia y crecimiento psicológico y emocional estas necesidades incluyen para sentirme
**necesidad crecimiento personal notas abebooks** - Apr 04 2023
web necesidad de crecimiento personal notas sobre las 14 necesidades de virginia henderson paperback by cristina moreno zapardiel diego molina ruiz and a great selection of related books art and collectibles available now at abebooks com
*necesidad de crecimiento personal notas sobre las 14 necesidades de* - May 05 2023
web necesidad de crecimiento personal notas sobre las 14 necesidades de virginia henderson 12 moreno zapardiel cristina molina ruiz diego molina ruiz diego amazon sg books
*necesidad de crecimiento personal notas sobre las pdf* - Jun 25 2022
web necesidad de crecimiento personal notas sobre las 1 necesidad de crecimiento personal notas sobre las necesidad de crecimiento personal manual de recursos humanos 3ª ed cinco escritos sobre el uso de ayahuasca en psicoterapia notas para el desarrollo personal y empresarial técnicas de venta comv0108 programas de
necesidad de crecimiento definición y concepto estudyando - Mar 03 2023
web nov 10 2020 una necesidad de crecimiento es parte de la jerarquía de necesidades de abraham maslow que se denominan necesidades de autorrealización abraham maslow que vivió entre 1908 y 1970 fue un psicólogo estadounidense y una figura clave en la escuela de pensamiento de la psicología transpersonal es más conocido por el
**necesidad de crecimiento personal notas sobre las 2022** - Apr 23 2022
web talentos naturales con los que contamos en la vida podremos alcanzar la cima del éxito profesional personal y financiero

para raquel identificar nuestra marca personal es encontrarnos con nuestra esencia con los que define para poder sacar provecho de ello comunicándolo a los demás

*necesidad de crecimiento personal notas sobre las* - Jul 27 2022

web necesidad de crecimiento personal notas sobre las la nota yes i can sí yo puedo necesidad de eliminacion la construcción cultural del cuerpo un estudio etnográfico en una población de mujeres universitarias de almería profesorado cultura y postmodernidad rompe el libreto y conquista tu mejor versión notas sobre economía

tipos de necesidades para el crecimiento personal - Jan 01 2023

web cuando de salud a todos los niveles se trata hay un camino único y efectivo respetar mis necesidades conoce más de esto aquí cómo funcionan las necesidades el disparador de las emociones son las necesidades ya que nuestra naturaleza funciona de la siguiente forma percibimos el medio ambiente por medio de nuestros cinco sentidos en ese

*necesidad de crecimiento personal notas sobre las 2023* - Sep 28 2022

web conjunto de sugerencias que sirvan de estímulo para que el psicoterapeuta las modifique y adapte a la situación y la persona que tiene delante por que el objetivo es ser útil a

**necesidad de crecimiento personal notas sobre las 2023** - Aug 28 2022

web necesidad de crecimiento personal notas sobre las is available in our digital library an online access to it is set as public so you can get it instantly our book servers saves in multiple locations allowing you to get the most less latency time to download any of our books like this one

*le club des cinq le club des cinq 20 ned le club des cinq et le* - Jan 27 2023

web mar 10 2021 ebook epub 4 49 résumé piégés les cinq ont à peine débarqué sur l île aux quatre vents que leur bateau disparaît pas de doute c est un coup des deux hommes qui rôdent dans les parages que complotent ils et pourquoi montent ils la garde autour d un vieux puits pour le savoir une seule solution le club des cinq

**le club des cinq 02 ned le club des cinq et le passage secret** - Sep 22 2022

web le club des cinq 02 ned le club des cinq et le passage secret poche illustré 27 février 2019 de enid blyton auteur 4 8 915 évaluations livre 2 sur 31 le club des cinq afficher tous les formats et éditions format kindle 4 49 lisez avec notre appli gratuite poche 6 50 32 autres d occasion 16 autres neuf

le club des cinq tome 2 le club des cinq et le passage secret - Jun 19 2022

web mar 15 2006 ean 9782012011380 224 pages hachette jeunesse 15 03 2006 3 83 5 154 notes résumé les vacances de noël se présentent mal pour le club des cinq claude et ses cousins sont bloqués à la villa des mouettes ils ont eu de mauvais résultats scolaires et m rolland est venu pour les faire travailler

**le club des cinq tome 2 le club des cinq 02 ned fnac** - Apr 29 2023

web feb 27 2019 le club des cinq tome 2 le club des cinq 02 ned le club des cinq et le passage secret enid blyton bb rose verte des milliers de livres avec la livraison chez vous en 1 jour ou en magasin avec 5 de réduction ou téléchargez la version ebook

le club des cinq 02 ned le club des cinq et le pa 2022 - May 31 2023

web le club des cinq 02 ned le club des cinq et le pa 1 le club des cinq 02 ned le club des cinq et le pa anglicisms neologisms and dynamic french enid blyton s five go adventuring again stealing things le mystère de l île les légendaires stories t02 le club des cinq junior 02 le mystère de l île around the world in 80 days le temps

**le club des cinq 02 ned le club des cinq et le passage secret** - Nov 24 2022

web feb 27 2019 acheter 6 50 4 49 les vacances de noël se présentent mal pour le club des cinq claude et ses cousins sont bloqués à la villa des mouettes ils ont eu de mauvais résultats scolaires et m rolland est venu pour les faire travailler mais bien vite les enfants remarquent que leur professeur a un comportement curieux

**le club des cinq saison 2 allociné** - Aug 02 2023

web de park hye ryun avec de de nouvelles séries en ce moment à la tv découvrez les 7 épisodes de la saison 2 de la série le club des cinq

**le club des cinq 02 ned le club des cinq et le pa** - Aug 22 2022

web le club des cinq 02 ned le club des cinq et le pa famine immigrants jan 30 2021 national library of medicine current catalog oct 19 2022 register of the commissioned and warrant officers of the navy of the united states including officiers of the marine corps jul 24 2020 the reports of sir edward coke kt 1572 1617 jun 03 2021

*le club des cinq wikipédia* - Jul 01 2023

web le club des cinq titre original the famous five est une série de romans d aventures pour enfants et jeunes adolescents écrite par enid blyton et publiée en angleterre de 1942 à 1963 en france elle est parue de 1955 à 1967 1 dans la collection nouvelle bibliothèque rose puis bibliothèque rose

le club des cinq 02 ned le club des cinq et le pa full pdf - Sep 03 2023

web le club des cinq et le trésor de l île l étalon noir 02 le retour de l Étalon noir guide du routard bretagne sud 2018 children of the resistance volume 3 the two giants stealing things enid blyton s five go adventuring again le temps immobilet02 around the world in 80 days revenge of the lizard club le club des cinq junior 02 le

**enid blyton le club des cinq enid blyton archive org** - Oct 04 2023

web 2017 07 02 12 53 16 identifier enidblytonclubdescinq identifier ark ark 13960 t03z3x78p ocr abbyy finereader 11 0 ppi 600 scanner internet archive html5 uploader 1 6 3 12 le club des cinq et les papillons djvu txt download 304 7k 13

**le club des cinq 02 ned le club des cinq et le pa** - Jul 21 2022

web le club des cinq et le trésor de l île le club des cinq 02 ned le club des cinq et le pa downloaded from admin store motogp com by guest delacruz logan the 5 second rule fodors travel publications le club des cinq et le trésor de l îlehachette jeunesse five run away together hodder children s books meet julian dick anne george and

le club des cinq 02 ned le club des cinq et le pa 2023 - Oct 24 2022

web le club des cinq et le passage secret le club des cinq 02 ned le club des cinq et le pa downloaded from mail thekingiscoming com by guest jamiya nathanael montreal and quebec city 2008 les Éditions la plume d or les vacances de noël se présentent mal pour le club des cinq claude et ses cousins sont bloqués à la villa des mouettes ils

**le club des cinq 02 ned le club des cinq et le pa download** - Mar 29 2023

web 2 le club des cinq 02 ned le club des cinq et le pa 2022 04 12 le club des cinq 02 ned le club des cinq et le pa downloaded from eagldemo2 eagltechnology com by guest kelley wood a lazy afternoon john wiley sons pour la première fois françois mick et annie vont passer les vacances chez leur oncle et leur tante à kernach ils y font

**le club des cinq tome 17 le club des cinq et les papillons** - May 19 2022

web nov 1 1999 les enfants et les chiens s écartèrent pendant que m grégoire s approchait sur la pointe des pieds d un papillon aux riches couleurs où dominaient le noir et le rouge feu il butinait une fleur d un coup précis le filet s abattit emprisonnant l insecte affolé m grégoire s empara de lui et le montra aux enfants

le club des cinq 02 ned le club des cinq et le pa - Feb 25 2023

web les légendaires stories t02 le club des cinq 02 ned le club des cinq et le pa downloaded from admin store motogp com by guest cameron mccarthy enid blyton s five go adventuring again hay house inc en sauvant la vie d un joailler tombé dans un piège les légendaires découvrent qu un complot vise kash kash le roi des elfes sans

*le club des cinq 02 ned le club des cinq et le pa 2022* - Feb 13 2022

web le club des cinq 02 ned le club des cinq et le pa downloaded from web1 kdhx org by guest liu hinton le temps immobilet02 simon and schuster le prince halan se voit confier une importante mission par son père sauver la reine qui a été prise en otage sur l île d exotica là bas il fait face à un adversaire plus redoutable qu il ne l

le club des cinq 02 ned le club des cinq et le pa copy - Mar 17 2022

web le club des cinq junior 02 le mystère de l île princeton university press il y a de la lumière sur l île de kernach c est sûr quelqu un s y est aventuré sans en avoir demandé la permission à qui que ce soit claude est furieuse et bien décidée à se rendre sur place pour démasquer ce mystérieux intrus a lazy afternoon

*le club des cinq tome 10 le club des cinq 10 ned fnac* - Dec 26 2022

web feb 27 2019 le club des cinq tome 10 le club des cinq 10 ned le club des cinq va camper enid blyton bb rose verte des milliers de livres avec la livraison chez vous en 1 jour ou en magasin avec 5 de réduction ou téléchargez la version ebook

**le club des cinq 02 ned le club des cinq et le passage secret goodreads** - Apr 17 2022
web les vacances de noël se présentent mal pour le club des cinq claude et ses cousins sont bloqu le club des cinq 02 ned le club des cinq et le passage secret enid blyton 4 00 8 ratings 0 reviews want to read buy on amazon rate this book les vacances de noël se présentent mal pour le club des cinq

**i always wanted to be david attenborough björk on protecting** - Nov 24 2022
web 11 hours ago the singer is releasing a single with rosalía to support action against intensive salmon farming she talks about being a guardian of iceland s wilderness and how young people will make real change

netia logiciels d automation et de diffusion radio - Sep 22 2022
web specialized software for radio and audio netia production and scheduling systems facilitate accelerate and secure the core business processes of our radio broadcast customers our easy to use tools offer all essential functionalities with ergonomics tuned to the radio requirements during the course of nearly 30 years of evolution

**netia icelandic edition help environment harvard edu** - Feb 13 2022
web netia icelandic edition is available in our digital library an online access to it is set as public so you can get it instantly our books collection saves in multiple countries allowing you to get the most less latency time to download any of our books like this one

**netið icelandic edition by lilja sigurðardóttir** - Jul 01 2023
web netið icelandic edition by lilja sigurðardóttir full text of bibliotheca grenvilliana internet archive barbican announces its 2020 21 classical music season

iceland s prime minister joins thousands of women on strike - Oct 24 2022
web oct 23 2023 prime minister katrín jakobsdóttir pictured in june joined women across iceland striking for equality on october 24 2023 daniel mihailescu afp getty images cnn thousands of women

**netið icelandic edition by lilja sigurðardóttir** - Oct 04 2023
web netið icelandic edition by lilja april 15th 2020 spcc e magazine special edition spcc polkomtel orange t mobile netia both with regards to foreign panies investing in iceland and sweden and icelandic and the icelandic horse the icelandic horse is the only horse breed in iceland they are small and at times can bee pony

*netia icelandic edition renewalcc com* - Feb 25 2023
web 2 netia icelandic edition 2023 02 21 dependent driven by historical legacies there is scope to choose this compelling discussion of adaptations of small states will prove invaluable to scholars in political science international relations and regional studies as well as policy makers and in

**netiaicelandicedition** - Jun 19 2022

web benjamin e smith v 12 atlas jan 15 2022 netia icelandic edition pdf feb 02 2023 netia icelandic edition pdf is available in our book collection an online access to it is set as public so you can get it instantly our digital library spans in multiple locations allowing you to get the most less latency time to download any of our books like

*netið icelandic edition by lilja sigurðardóttir* - Mar 17 2022

web march 27th 2020 andrew mcgregor presents a new production by netia jones of the britten opera tom mckinney introduces an edition of the programme recorded yesterday at icelandic band mammút and press release lincoln center for

**netið icelandic edition by lilja sigurðardóttir bespoke cityam** - May 31 2023

web this netið icelandic edition by lilja sigurðardóttir as one of the majority operating sellers here will entirely be accompanied by by the best selections to review you may not be baffled to

*netia wikipedia* - May 19 2022

web netia is a telecommunications company which owns the second largest fixed line cable television and broadband network in poland the company was founded in 1990 and the following year was awarded its first concession to provide local telecommunications services in the city of piła three years later the company built and opened its own first

swarm of earthquakes in iceland heralds next volcanic eruption - Dec 26 2022

web fri 27 oct 2023 11 37 edt last modified on fri 27 oct 2023 11 50 edt a seismic swarm has hit the reykjanes peninsula in south west iceland with more than 5 500 small earthquakes in the last

*netia icelandic edition controlplane themintgaming com* - Apr 17 2022

web 2 netia icelandic edition 2020 07 06 the encyclopædia britannica gower publishing ltd in european policy making the nordic countries are often viewed as a relatively coherent bloc in international and european affairs the nordic position has traditionally been conditioned on being different from and better than europe

netia name meaning popularity and info on babynames com - Aug 22 2022

web oct 23 2023 what is the meaning of the name netia the name netia is primarily a female name of hebrew origin that means planting people who like the name netia also like talia evangeline midori leora apollonia tivona anika markku jack jethro kale owen nicholas adonis names like netia

netið icelandic edition by lilja sigurðardóttir - Mar 29 2023

web aug 31 2023 april 8th 2020 the 8th edition of the ftth conference will be opened by high level officials from project manager and software expert for the icelandic banks data centre mr thrainsson has 47 was appointed member of the management board of netia sa effective april 5 2006 he has been the chief legal officer of netia since march 2003

**netia icelandic edition help environment harvard edu** - Apr 29 2023

web netia icelandic edition as recognized adventure as without difficulty as experience not quite lesson amusement as well as

accord can be gotten by just checking out a ebook netia icelandic edition in addition to it is not directly done you could put up with even more roughly this life on the order of the world

**netið icelandic edition by lilja sigurðardóttir** - Aug 02 2023

web april 26th 2020 beginnersguidetothequine the icelandic horse the icelandic horse is the only horse breed in iceland they are small and at times can bee pony sized they are registered as a horse and not a the characteristics of the icelandic horse the icelandic horses height ranges between cm stick and hands

**women in iceland go on strike against gender inequality** - Jul 21 2022

web oct 23 2023 iceland has made big strides toward gender equality for the 14th consecutive year the nation had the best overall score on the world economic forum s global gender gap report published in june

**netið icelandic edition kindle edition amazon com** - Sep 03 2023

web oct 20 2016 buy netið icelandic edition read kindle store reviews amazon com

**global gender gap report 2023 world economic forum** - Jan 27 2023

web dec 31 2022 the global gender gap score in 2023 for all 146 countries included in this edition stands at 68 4 closed considering the constant sample of 145 countries covered in both the 2022 and 2023 editions the overall score changed from 68 1 to 68 4 an improvement of 0 3 percentage points compared to last year s edition