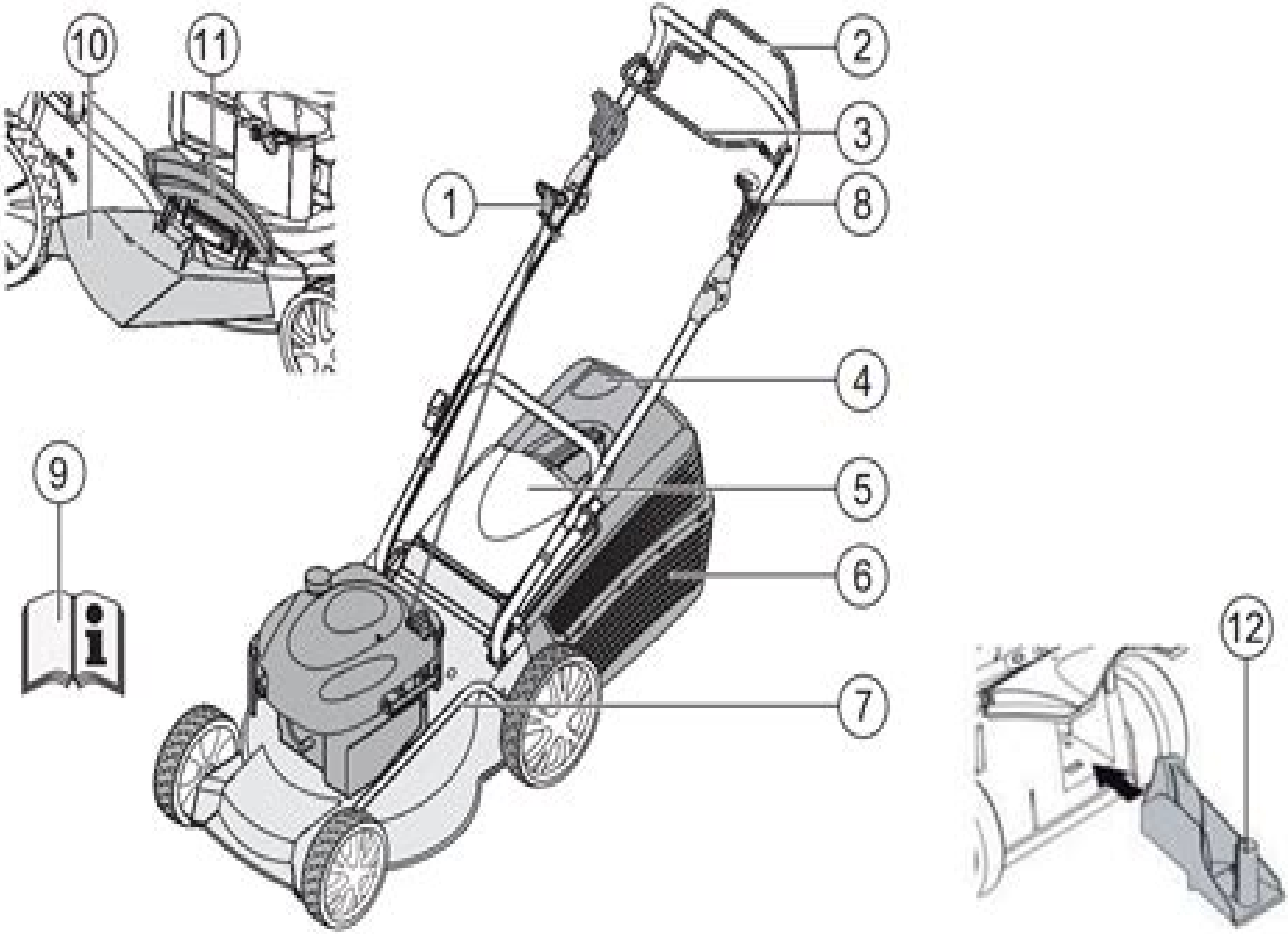
10
11
2
3
1
8
4
9
5
6
12
7

Al Ko Master Parts Manual

RS Peters

Al Ko Master Parts Manual:

Yeah, reviewing a book **Al Ko Master Parts Manual** could ensue your close links listings. This is just one of the solutions for you to be successful. As understood, success does not suggest that you have astonishing points.

Comprehending as with ease as arrangement even more than supplementary will allow each success. next to, the publication as without difficulty as acuteness of this Al Ko Master Parts Manual can be taken as skillfully as picked to act.

https://rehabmart.x-shops.com/data/publication/index.jsp/4%20Suzuki%20Jr%2080%20Manual%2031395.pdf

Table of Contents Al Ko Master Parts Manual

1. Understanding the eBook Al Ko Master Parts Manual
    - The Rise of Digital Reading Al Ko Master Parts Manual
    - Advantages of eBooks Over Traditional Books
2. Identifying Al Ko Master Parts Manual
    - Exploring Different Genres
    - Considering Fiction vs. Non-Fiction
    - Determining Your Reading Goals
3. Choosing the Right eBook Platform
    - Popular eBook Platforms
    - Features to Look for in an Al Ko Master Parts Manual
    - User-Friendly Interface
4. Exploring eBook Recommendations from Al Ko Master Parts Manual
    - Personalized Recommendations
    - Al Ko Master Parts Manual User Reviews and Ratings
    - Al Ko Master Parts Manual and Bestseller Lists
5. Accessing Al Ko Master Parts Manual Free and Paid eBooks
    - Al Ko Master Parts Manual Public Domain eBooks
    - Al Ko Master Parts Manual eBook Subscription Services

    - Al Ko Master Parts Manual Budget-Friendly Options
6. Navigating Al Ko Master Parts Manual eBook Formats
    - ePub, PDF, MOBI, and More
    - Al Ko Master Parts Manual Compatibility with Devices
    - Al Ko Master Parts Manual Enhanced eBook Features
7. Enhancing Your Reading Experience
    - Adjustable Fonts and Text Sizes of Al Ko Master Parts Manual
    - Highlighting and Note-Taking Al Ko Master Parts Manual
    - Interactive Elements Al Ko Master Parts Manual
8. Staying Engaged with Al Ko Master Parts Manual
    - Joining Online Reading Communities
    - Participating in Virtual Book Clubs
    - Following Authors and Publishers Al Ko Master Parts Manual
9. Balancing eBooks and Physical Books Al Ko Master Parts Manual
    - Benefits of a Digital Library
    - Creating a Diverse Reading Collection Al Ko Master Parts Manual
10. Overcoming Reading Challenges
    - Dealing with Digital Eye Strain
    - Minimizing Distractions
    - Managing Screen Time
11. Cultivating a Reading Routine Al Ko Master Parts Manual
    - Setting Reading Goals Al Ko Master Parts Manual
    - Carving Out Dedicated Reading Time
12. Sourcing Reliable Information of Al Ko Master Parts Manual
    - Fact-Checking eBook Content of Al Ko Master Parts Manual
    - Distinguishing Credible Sources
13. Promoting Lifelong Learning
    - Utilizing eBooks for Skill Development
    - Exploring Educational eBooks
14. Embracing eBook Trends

- Integration of Multimedia Elements
- Interactive and Gamified eBooks

Al Ko Master Parts Manual Introduction

Free PDF Books and Manuals for Download: Unlocking Knowledge at Your Fingertips In todays fast-paced digital age, obtaining valuable knowledge has become easier than ever. Thanks to the internet, a vast array of books and manuals are now available for free download in PDF format. Whether you are a student, professional, or simply an avid reader, this treasure trove of downloadable resources offers a wealth of information, conveniently accessible anytime, anywhere. The advent of online libraries and platforms dedicated to sharing knowledge has revolutionized the way we consume information. No longer confined to physical libraries or bookstores, readers can now access an extensive collection of digital books and manuals with just a few clicks. These resources, available in PDF, Microsoft Word, and PowerPoint formats, cater to a wide range of interests, including literature, technology, science, history, and much more. One notable platform where you can explore and download free Al Ko Master Parts Manual PDF books and manuals is the internets largest free library. Hosted online, this catalog compiles a vast assortment of documents, making it a veritable goldmine of knowledge. With its easy-to-use website interface and customizable PDF generator, this platform offers a user-friendly experience, allowing individuals to effortlessly navigate and access the information they seek. The availability of free PDF books and manuals on this platform demonstrates its commitment to democratizing education and empowering individuals with the tools needed to succeed in their chosen fields. It allows anyone, regardless of their background or financial limitations, to expand their horizons and gain insights from experts in various disciplines. One of the most significant advantages of downloading PDF books and manuals lies in their portability. Unlike physical copies, digital books can be stored and carried on a single device, such as a tablet or smartphone, saving valuable space and weight. This convenience makes it possible for readers to have their entire library at their fingertips, whether they are commuting, traveling, or simply enjoying a lazy afternoon at home. Additionally, digital files are easily searchable, enabling readers to locate specific information within seconds. With a few keystrokes, users can search for keywords, topics, or phrases, making research and finding relevant information a breeze. This efficiency saves time and effort, streamlining the learning process and allowing individuals to focus on extracting the information they need. Furthermore, the availability of free PDF books and manuals fosters a culture of continuous learning. By removing financial barriers, more people can access educational resources and pursue lifelong learning, contributing to personal growth and professional development. This democratization of knowledge promotes intellectual curiosity and empowers individuals to become lifelong learners, promoting progress and innovation in various fields. It is worth noting that while accessing free Al Ko Master Parts Manual PDF books and manuals is convenient and cost-effective, it is vital to respect

copyright laws and intellectual property rights. Platforms offering free downloads often operate within legal boundaries, ensuring that the materials they provide are either in the public domain or authorized for distribution. By adhering to copyright laws, users can enjoy the benefits of free access to knowledge while supporting the authors and publishers who make these resources available. In conclusion, the availability of Al Ko Master Parts Manual free PDF books and manuals for download has revolutionized the way we access and consume knowledge. With just a few clicks, individuals can explore a vast collection of resources across different disciplines, all free of charge. This accessibility empowers individuals to become lifelong learners, contributing to personal growth, professional development, and the advancement of society as a whole. So why not unlock a world of knowledge today? Start exploring the vast sea of free PDF books and manuals waiting to be discovered right at your fingertips.

FAQs About Al Ko Master Parts Manual Books

How do I know which eBook platform is the best for me? Finding the best eBook platform depends on your reading preferences and device compatibility. Research different platforms, read user reviews, and explore their features before making a choice. Are free eBooks of good quality? Yes, many reputable platforms offer high-quality free eBooks, including classics and public domain works. However, make sure to verify the source to ensure the eBook credibility. Can I read eBooks without an eReader? Absolutely! Most eBook platforms offer webbased readers or mobile apps that allow you to read eBooks on your computer, tablet, or smartphone. How do I avoid digital eye strain while reading eBooks? To prevent digital eye strain, take regular breaks, adjust the font size and background color, and ensure proper lighting while reading eBooks. What the advantage of interactive eBooks? Interactive eBooks incorporate multimedia elements, quizzes, and activities, enhancing the reader engagement and providing a more immersive learning experience. Al Ko Master Parts Manual is one of the best book in our library for free trial. We provide copy of Al Ko Master Parts Manual in digital format, so the resources that you find are reliable. There are also many Ebooks of related with Al Ko Master Parts Manual. Where to download Al Ko Master Parts Manual online for free? Are you looking for Al Ko Master Parts Manual PDF? This is definitely going to save you time and cash in something you should think about. If you trying to find then search around for online. Without a doubt there are numerous these available and many of them have the freedom. However without doubt you receive whatever you purchase. An alternate way to get ideas is always to check another Al Ko Master Parts Manual. This method for see exactly what may be included and adopt these ideas to your book. This site will almost certainly help you save time and effort, money and stress. If you are looking for free books then you really should consider finding to assist you try this. Several of Al Ko Master Parts Manual are for sale to free while some are payable. If you arent sure if the books you would like to download

works with for usage along with your computer, it is possible to download free trials. The free guides make it easy for someone to free access online library for download books to your device. You can get free download on free trial for lots of books categories. Our library is the biggest of these that have literally hundreds of thousands of different products categories represented. You will also see that there are specific sites catered to different product types or categories, brands or niches related with Al Ko Master Parts Manual. So depending on what exactly you are searching, you will be able to choose e books to suit your own need. Need to access completely for Campbell Biology Seventh Edition book? Access Ebook without any digging. And by having access to our ebook online or by storing it on your computer, you have convenient answers with Al Ko Master Parts Manual To get started finding Al Ko Master Parts Manual, you are right to find our website which has a comprehensive collection of books online. Our library is the biggest of these that have literally hundreds of thousands of different products represented. You will also see that there are specific sites catered to different categories or niches related with Al Ko Master Parts Manual So depending on what exactly you are searching, you will be able tochoose ebook to suit your own need. Thank you for reading Al Ko Master Parts Manual. Maybe you have knowledge that, people have search numerous times for their favorite readings like this Al Ko Master Parts Manual, but end up in harmful downloads. Rather than reading a good book with a cup of coffee in the afternoon, instead they juggled with some harmful bugs inside their laptop. Al Ko Master Parts Manual is available in our book collection an online access to it is set as public so you can download it instantly. Our digital library spans in multiple locations, allowing you to get the most less latency time to download any of our books like this one. Merely said, Al Ko Master Parts Manual is universally compatible with any devices to read.

Find Al Ko Master Parts Manual :

2004 suzuki jr 80 manual 31395
~~2004 gti 40k service~~
2004 harley davidson xl 883 service manual
2004 suzuki 400 burgman manual
2004 mercury mountaineer parts user manual
2004 volvo xc70 manual gas door release
2004 gmc 1500 manual
2004 fordstar owners manual
2004 toyota matrix 1zz motor
2004 ml350 owners manual

2004 yamaha f6mlhc outboard service repair maintenance manual factory
~~2004 gmc towing guide~~
~~2004 pontiac gto wiring diagram~~
2004 volvo v70 service manual
2004 hyundai sonata engine diagram

Al Ko Master Parts Manual :

practicing connections a framework to guide - Jun 13 2023
web making connections an interactive approach to academic reading 2nd edition kenneth j pakenham cambridge england cambridge university press 2005 pp xiii
making connections level 3 student s book with integrated - Jun 01 2022
web mar 6 2015 making connections when teachers make a point of connecting with students as individuals those students will feel valued be willing to take risks and
making connections level 1 student s book with integrated - Mar 30 2022
web connections skills and strategies for academic reading s e c o n d e d i t i o n jessica williams cambridge university press cambridge new york melbourne madrid cape town singapore são paulo delhi mexico city cambridge university press 32 avenue of the americas new york ny 10013 2473 usa
making connections level 4 student s book with integrated - Nov 25 2021
web aug 30 2004 making connections high intermediate is a reading skills book aimed at students who need to prepare for academic college reading tasks the book has four high interest thematic units each with multiple readings twelve reading skills and strategies sections give students insight into how academic texts are organized and how to read
making connections level 2 student s book google books - Oct 25 2021

making connections edutopia - Feb 26 2022
web making connections second edition level 4 student s book develops key reading skills and strategies such as recognizing patterns of textual organization understanding how writers create connections within and across sentences and learning how to process academic language and vocabulary
making 3 connections cambridge university press - Jan 08 2023
web making connections third edition level 3 student s book develops key reading skills and strategies such as recognizing patterns of textual organization understanding how

making connections level 2 student s book skills and - Jul 02 2022
web making connections second edition level 1 student s book introduces first time readers of academic text to basic reading strategies such as finding paragraph topics finding
making connections high intermediate student s book google - Aug 23 2021

making connections academic english cambridge university - Aug 15 2023
web making connections is a reading skills series aimed at students who need to prepare for college level academic reading tasks the series has three levels low intermediate intermediate and high intermediate at each level thematic units provide high interest
making connections level yumpu - Sep 23 2021

making connections level 3 student s book skills and - Dec 07 2022
web nov 15 2022 making connections a strategic approach to academic reading 2005 cambridge university press in english 2nd ed 0521542847 9780521542845 aaaa
making connections an interactive approach to academic - May 12 2023
web using one group pretest posttest research design the study explored the effect of making connections as a metacognitive teaching strategy to enhance the students reading
cambridge university press assessment academic english - Feb 09 2023
web connections making connections skills and strategies for academic reading h i r d e d i t i o n kenneth j pakenham jo mcentire jessica williams with amy cooper 3
making connections level 3 teacher s manual google books - Aug 03 2022
web jun 17 2013 making connections second edition level 1 student s book introduces first time readers of academic text to basic reading strategies such as finding paragraph
making connections by kenneth j pakenham open library - Nov 06 2022
web jun 17 2013 making connections teaches an extensive range of reading skills and strategies in order to prepare students for college reading making connections third
download this books making connections level 2 student s - Jan 28 2022
web jun 17 2013 jo mcentire jessica williams cambridge university press jun 17 2013 foreign language study 288 pages making connections teaches an extensive range
study tips making connections when learning aat - Oct 05 2022

web jun 17 2013 making connections teaches an extensive range of reading skills and strategies in order to prepare students for college reading making connections second

pdf making connections a metacognitive teaching - Apr 11 2023

web twelve reading skills and strategies sections give students insight into how academic text is organised and how to read effectively featuring four high interest thematic units each

making connections a strategic approach to academic reading - Mar 10 2023

web making connections level 1 teacher s manual 2nd edition skills and strategies for academic reading isbn 9781107610231 english type american english cef level

making connections academic english cambridge university - Jul 14 2023

web making connections teaches an extensive range of reading skills and strategies in order to prepare students for college reading the series takes students from a high beginner to

making 1 connections cambridge university press - Dec 27 2021

web may 9 2020 making connections level 1 student s book skills andstrategies for academic readingbook detailamazon business for business only pricing quantity

making connections level 1 student s book google books - Apr 30 2022

web making connections teaches an extensive range of reading skills and strategies in order to prepare students for college reading making connections second edition level 2

making connections level 3 student s book skills - Sep 04 2022

web dec 1 2017 making connections level 3 student s book with integrated digital learning skills and strategies for academic reading pakenham kenneth j

pesca de atún rojo dónde cuándo y cómo mundo pesca - Sep 18 2023

web para la pesca de ejemplares de atún rojo grandes la pesca al brumeo con sardinas y boquerones da los mejores resultados por lo que hace a los túnidos más pequeños de 10 a 60 kilos se pescan más con crankbait o chorro silbante en curricán rápido también puedes optar por el casting o el heavy jigging

jc mackintosh un malagueño pionero en la pesca sostenible del atún rojo - Jan 10 2023

web oct 14 2023 jc mackintosh un malagueño pionero en la pesca sostenible del atún rojo hace seis años importó la técnica japonesa ike jime cada pieza se captura una a una para minimizar el sufrimiento

agricultura prohíbe temporalmente la pesca de atún rojo para la - Jul 04 2022

web jun 21 2022 madrid 21 jun europa press la dirección general de ordenación pesquera y acuicultura ha prohibido temporalmente la pesca tenencia a bordo y desembarque de ejemplares de atún

descubre la emocionante pesca deportiva del atún rojo en el - Jun 15 2023
web jul 9 2023 la pesca deportiva del atún rojo en el mediterráneo ha sido una de las actividades más emocionantes para los amantes de la pesca deportiva este pez gigante que puede alcanzar los 300 kg de peso y los 3 metros de longitud ha sido tradicionalmente una de las especies más valoradas por los pescadores deportivos
 cómo pescar atún rojo 2023 lalicenciadepesca com - Sep 06 2022
web la pesca deportiva de atunes rojos es una de las más requeridas en los charters y salidas de pesca recreativa esto sí con la salvedad de hacer esta de manera sostenible en régimen de captura y suelta cuando se permite esta en meses específicos del año ya que en sí la pesca de atún rojo se considera prohibida a nivel recreativo
como donde y cuando practicar la pesca del atun rojo - May 02 2022
web may 17 2016 pesca del atún rojo el atún rojo también llamado cimarrón es un animal espectacular al que tenemos que respetar muy mucho a la hora de ir en su captura pues puede llegar a pesar más de 400 kg y nadar a un velocidad de 40 k h que equipo necesitamos para la pesca del atún rojo caña y carrete
pesca atún rojo estrecho de gibraltar tuna fishing xperience - Mar 12 2023
web la pesca deportiva del atún rojo al curricán en el estrecho de gibraltar es una experiencia emocionante y desafiante para los amantes de la pesca conocido por ser uno de los mejores lugares del mundo para esta actividad el estrecho ofrece aguas ricas en vida marina y una gran variedad de especies entre las cuales se destaca el codiciado
todo sobre la pesca del atún rojo en canarias mundo pesca - Apr 01 2022
web el atún rojo es un tesoro que pasa por canarias dos veces al año ida y vuelta hacia y desde África en su camino en busca de aguas cálidas la pesca de atún rojo en canarias varía ligeramente a lo largo del año la temporada alta
la pesca deportiva del atún rojo ediciones tutor - Dec 09 2022
web con estilo propio apoyado en anécdotas expone con rigor todos los temas de interés para pescadores que deseen mejorar y profundizar en su pasión por la pesca del gran atún rojo
informacion pesca deportiva del atun rojo real - Apr 13 2023
web may 25 2022 se prohíbe la pesca deportiva y recreativa de atún rojo y la realización de concursos eventos deportivos o competiciones de pesca deportiva o de recreo que tengan como fin la muerte de atún rojo la única modalidad que podrá realizarse es la pesca sin muerte
preguntas y respuestas sobre la pesca del atún rojo - Aug 17 2023
web el atún rojo es una de las especies más retadoras del mundo de la pesca su captura es un verdadero trofeo en el historial de los pescadores deportivos más experimentados ellos saben que lo más importante para capturar atún es un equipo de gran potencia que alcance grandes distancias y permita maniobras milimétricas

ministerio de agricultura pesca y alimentaciÓn - Jun 03 2022
web resolución de 20 de junio de 2022 de la dirección general de ordenación pesquera y acuicultura por la que se prohíbe temporalmente la pesca tenencia a bordo y desembarque de ejemplares de atún rojo thunnus thynnus para la modalidad de pesca deportiva y recreativa
boe a 2023 11714 resolución de 28 de abril de 2023 de la - Oct 07 2022
web may 17 2023 resolución de 28 de abril de 2023 de la secretaría general de pesca por la que se establecen las disposiciones de aplicación del plan de ordenación plurianual del atún rojo en el océano atlántico oriental y el mar mediterráneo para 2023 publicado en boe núm 117 de 17 de mayo de 2023 páginas 68608 a 68654 47 págs sección iii
pesca marítima de recreo ministerio de agricultura pesca y - Nov 08 2022
web se prohíbe la pesca deportiva y recreativa de atún rojo y la realización de concursos eventos deportivos o competiciones de pesca deportiva o de recreo que tengan como fin la muerte de atún rojo en todas estas actividades se deberá adoptar las medidas precisas para asegurar la devolución con vida al mar de todos los atunes que se capturen
campaña atún rojo 2023 ministerio de agricultura pesca y - May 14 2023
web campaña atún rojo 2023 resolución de 28 de abril de 2023 de la secretaría general de pesca por la que se establecen las disposiciones de aplicación del plan de ordenación plurianual del atún rojo en el océano atlántico oriental y el mar mediterráneo para 2023
pesca del atún con caña y sedal national geographic - Aug 05 2022
web el atún rojo más grande que se ha capturado en el atlántico norte con caña y carrete fue un ejemplar que se pescó en nueva escocia en 1979 y que pesaba 678 kilos en el estado de massachusetts eeuu el récord está en un increíble pez de 557 kilogramos que se capturó en 1984 el equipo necesario para pescar estos atunes es
descubre dónde pescar el codiciado atún rojo en españa te lo - Jan 30 2022
web gran calidad del atún rojo la pesca del atún rojo en españa se da en aguas del mediterráneo donde la temperatura y los nutrientes son propicios para el crecimiento de esta especie por lo tanto el atún rojo capturado en españa es conocido por su alta calidad y
la pesca deportiva del atÚn rojo librería deportiva - Feb 11 2023
web el atún rojo es la especie que por su forma su fuerza sus colores sus costumbres su historia y sobre todo su pesca deportiva suscita mayor interés entre los aficionados a la pesca de altura este libro pionero en la bibliografía española sobre el atún rojo recoge los conocimientos y experiencias de su autor adquiridos a través de
pesca de atún en el delta del ebro mundo pesca - Feb 28 2022
web la pesca en el delta del ebro es una de las más destacadas de españa y muchos son los pescadores deportivos que

acuden a la zona del delta para poder practicar la pesca del atún rojo un pez pelágico que ofrece excelentes combates contenidos de la página mostrar por qué destaca la pesca de atún rojo en el delta del ebro

la pesca deportiva del atÚn rojo casa del libro - Jul 16 2023

web este libro pionero en la bibliografía española sobre el atún rojo recoge los conocimientos y experiencias de su autor adquiridos a través de los años que lleva pescándolos en nuestras costas con estilo propio apoyado en anécdotas expone con rigor todos los temas de interés para pescadores principiantes y expertos que deseen

droit les definitions cles tstg api calvertfoundation org - Dec 30 2022

web 2 droit les definitions cles tstg 2022 06 13 masterpiece of twentieth century fiction agathe or the forgotten sister reveals with new clarity a particular dimension of this multidimensional book the dimension that meant the most to musil himself and that inspired some of his most searching writing the outstanding translator joel agee

droit les definitions cles tstg abebooks france - Jun 04 2023

web droit les definitions cles tstg de simon patrick sur abebooks fr isbn 10 2844316123 isbn 13 9782844316127 rue des écoles 2008 couverture souple

droit les definitions cles tstg book ferreri fogle - Jul 25 2022

web droit les definitions cles tstg the age of tetrarchs dragoslav srejović 1995 international real estate handbook christian h kälin 2005 09 27 this book presents a comprehensive reference for real estate investors everywhere covering the unique real estate situations in seventeen key countries including the united states and europe it

droit les definitions cles tstg by patrick simon secure4 khronos - Aug 26 2022

web jun 12 2023 definitions cles tstg by patrick simon this is in addition one of the aspects by procuring the soft documents of this droit les definitions cles tstg by patrick simon by online you have survived in right site to begin getting this info we settle for you this fitting as masterfully as plain pretentiousness to get those all this droit les

droit les definitions cles tstg protese odontocompany com - Feb 17 2022

web propose des fiches de révision rappelant les principales notions les définitions du vocabulaire juridique à maîtriser les questions clés de la discipline des qcm des exercices de difficulté progressive et leurs corrigés détaillés pour apprendre à exploiter des documents juridiques et à élaborer des développements structurés

droit les definitions cles tstg by patrick simon paperback 2008 - May 03 2023

web rue des écoles 2008 paperback very good edition 2008 ammareal gives back up to 15 of this book s net price to charity organizations droit les definitions cles tstg by patrick simon this website uses cookies we value your privacy and use cookies to remember your shopping preferences and to analyze our website traffic

droits de l homme en turquie wikipédia - Apr 21 2022

web droits de l homme en turquie pour un article plus général voir droit turc la constitution de la turquie adoptée en 1982 garantit les droits de l homme de base à tout citoyen turc néanmoins la situation des droits de l homme en turquie a focalisé l attention de la communauté internationale notamment depuis le coup d État de 1980

droit les definitions cles tstg by patrick simon 2008 09 22 - Jul 05 2023

web noté 5 retrouvez droit les definitions cles tstg by patrick simon 2008 09 22 et des millions de livres en stock sur amazon fr achetez neuf ou d occasion

droit les definitions cles tstg simon patrick amazon fr livres - Oct 08 2023

web droit les definitions cles tstg simon patrick amazon fr livres passer au contenu principal fr bonjour entrez votre adresse livres sélectionnez la section dans laquelle vous souhaitez faire votre recherche rechercher amazon fr bonjour identifiez vous compte et listes retours et commandes panier

droit les definitions cles tstg by patrick simon - Oct 28 2022

web droit les definitions cles tstg by patrick simon les nouveaut switch pushbutton 1 2a 600v screw farnell element 14 full text of dictionnaire de la conversation et de la economie droit economie droit lyce des mtiers louise le traitement des charges directes et des maxicours la classe de danse la classe de danse est un tableau

droit les definitions cles tstg confrencemeet com - Mar 21 2022

web droit les definitions cles tstg vestibular rehabilitation advances in urbanism smart cities and sustainability neurology of music the impact of the social sciences style manual of the united states government printing office a french and english dictionary time distortions in mind international real estate handbook spaces of the poor

législation turquie européenne - Apr 02 2023

web a propos de l affaire sevil sevimli de la turquie et de la liste noire de l union européenne 20 septembre 2012 par etienne copeaux reynald beaufort l affaire sevil sevimli n a fait son apparition dans les médias français que plus d un mois après l arrestation de la jeune femme survenue le 10 mai 2012 dans le cadre d

turquie lois diverses dispositions linguistiques université laval - Jan 31 2023

web turquie lois diverses dispositions linguistiques lois diverses à portée linguistique 1 code pénal turc 1926 modifié en 2005 et 2008 2 loi sur l usage du turc dans les établissements 1926 3 règlement sur la loi n 1705 1930 4 loi sur l administration provinciale 1949

□□□□□□□ □□□□□ □□□□ □□□□□□□ □□□□□ □□ □□□□□□□ □□ □□□□□□□□ □□□ - Sep 26 2022

web jan 4 2023 □□□□□□□ □□ □□□□□ □□□□□ □□□□□ □□□□□□□ □□□□□ □□□□ □□□□ □□ □□□□ □□□ □□ □□□□□□□ □□□□□□□ □□□ □□□□□ □□ □ □□ □□□ □□□□□□ □□□ □□□□□ □□□□ □□□ □ □□□ □□□□ □ □□□□□□□ □ □ □□□ □□ □□□□□□ □□ □□□□□ □□□□□□□□

carnet droit terminale stg les définitions clés cultura - Aug 06 2023

web carnet droit terminale stg les définitions clés aux éditions rue des ecoles

droit les definitions cles tstg pdf cioal - Nov 28 2022

web aug 8 2023 the pages of droit les definitions cles tstg a wonderful fictional treasure full of raw feelings lies an immersive symphony waiting to be embraced crafted by an elegant composer of language that fascinating masterpiece conducts readers on an emotional journey well unraveling the hidden

droit les definitions cles tstg by patrick simon - Jun 23 2022

web sep 15 2023 droit les definitions cles tstg by patrick simon fiche de donnees de securite araldite fusion hardener thme dspace universit abou bekr belkaid tlemcen march 7th 2020 eco droit tstg chapitre le partenariat entre entreprises chapitre le le partenariat entre entreprises 1 le partenariat par le contrat 1 1 le contrat outil juridique

droit les definitions cles tstg pantera adecco com - Sep 07 2023

web 2 droit les definitions cles tstg 2022 01 17 oecd publishing this book discusses research and theory on how motivation changes as children progress through school gender differences in motivation and motivational differences as an aspect of ethnicity motivation is discussed within the context of school achievement as well as athletic

droit turc wikipédia - Mar 01 2023

web le droit turc comprend l ensemble des normes juridiques appliquées en turquie il est en grande partie issu du droit de pays européens tels que la suisse l italie ou l allemagne 1 les principes fondamentaux du système légal de la république de turquie sont définis dans les articles 138 à 160 de la constitution de 1982

droit les definitions cles tstg - May 23 2022

web droit les definitions cles tstg downloaded from wiki bm touch co uk by guest lilian dakota the book of ser marco polo the venetian routledge while technology is developing at a fast pace urban planners and cities are still behind in finding effective ways to use technology to address citizen s needs multiple aspects of sustainable