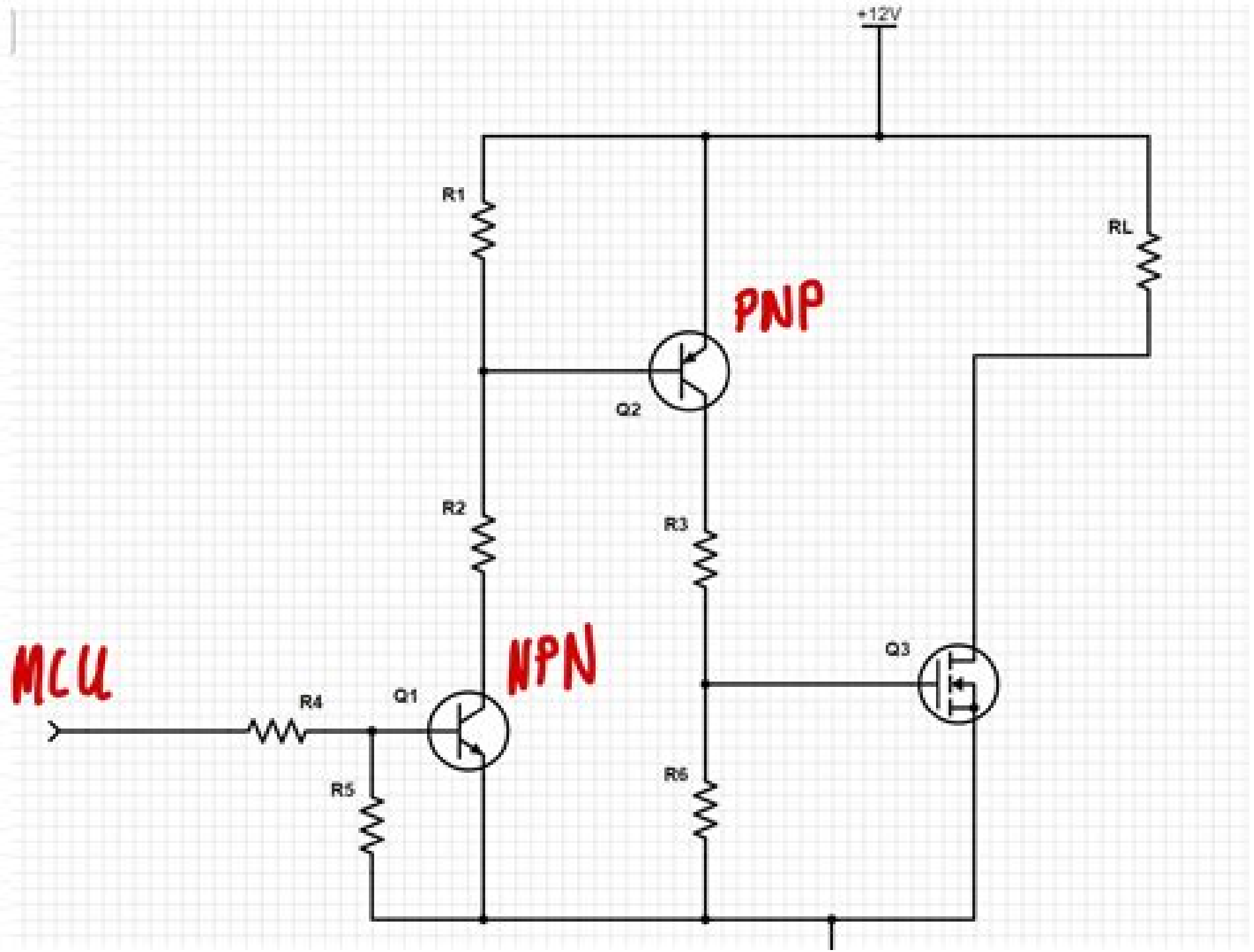
+12V
R1
RL
PNP
Q2
R2
R3
MCU
NPN
Q3
R4
Q1
R5
R6

Fet Circuits

S Marginson

Fet Circuits:

Fet Circuits Book Review: Unveiling the Power of Words

In a global driven by information and connectivity, the power of words has are more evident than ever. They have the ability to inspire, provoke, and ignite change. Such may be the essence of the book **Fet Circuits**, a literary masterpiece that delves deep to the significance of words and their effect on our lives. Compiled by a renowned author, this captivating work takes readers on a transformative journey, unraveling the secrets and potential behind every word. In this review, we shall explore the book is key themes, examine its writing style, and analyze its overall effect on readers.

https://rehabmart.x-shops.com/data/publication/Download_PDFS/boxless%20channel%20lineup%20insight%20communications%20welcome%20to.pdf

Table of Contents Fet Circuits

1. Understanding the eBook Fet Circuits
    - The Rise of Digital Reading Fet Circuits
    - Advantages of eBooks Over Traditional Books
2. Identifying Fet Circuits
    - Exploring Different Genres
    - Considering Fiction vs. Non-Fiction
    - Determining Your Reading Goals
3. Choosing the Right eBook Platform
    - Popular eBook Platforms
    - Features to Look for in an Fet Circuits
    - User-Friendly Interface
4. Exploring eBook Recommendations from Fet Circuits
    - Personalized Recommendations
    - Fet Circuits User Reviews and Ratings
    - Fet Circuits and Bestseller Lists

5. Accessing Fet Circuits Free and Paid eBooks
    - Fet Circuits Public Domain eBooks
    - Fet Circuits eBook Subscription Services
    - Fet Circuits Budget-Friendly Options
6. Navigating Fet Circuits eBook Formats
    - ePub, PDF, MOBI, and More
    - Fet Circuits Compatibility with Devices
    - Fet Circuits Enhanced eBook Features
7. Enhancing Your Reading Experience
    - Adjustable Fonts and Text Sizes of Fet Circuits
    - Highlighting and Note-Taking Fet Circuits
    - Interactive Elements Fet Circuits
8. Staying Engaged with Fet Circuits
    - Joining Online Reading Communities
    - Participating in Virtual Book Clubs
    - Following Authors and Publishers Fet Circuits
9. Balancing eBooks and Physical Books Fet Circuits
    - Benefits of a Digital Library
    - Creating a Diverse Reading Collection Fet Circuits
10. Overcoming Reading Challenges
    - Dealing with Digital Eye Strain
    - Minimizing Distractions
    - Managing Screen Time
11. Cultivating a Reading Routine Fet Circuits
    - Setting Reading Goals Fet Circuits
    - Carving Out Dedicated Reading Time
12. Sourcing Reliable Information of Fet Circuits
    - Fact-Checking eBook Content of Fet Circuits
    - Distinguishing Credible Sources
13. Promoting Lifelong Learning

- Utilizing eBooks for Skill Development
- Exploring Educational eBooks

14. Embracing eBook Trends
    - Integration of Multimedia Elements
    - Interactive and Gamified eBooks

Fet Circuits Introduction

Free PDF Books and Manuals for Download: Unlocking Knowledge at Your Fingertips In todays fast-paced digital age, obtaining valuable knowledge has become easier than ever. Thanks to the internet, a vast array of books and manuals are now available for free download in PDF format. Whether you are a student, professional, or simply an avid reader, this treasure trove of downloadable resources offers a wealth of information, conveniently accessible anytime, anywhere. The advent of online libraries and platforms dedicated to sharing knowledge has revolutionized the way we consume information. No longer confined to physical libraries or bookstores, readers can now access an extensive collection of digital books and manuals with just a few clicks. These resources, available in PDF, Microsoft Word, and PowerPoint formats, cater to a wide range of interests, including literature, technology, science, history, and much more. One notable platform where you can explore and download free Fet Circuits PDF books and manuals is the internets largest free library. Hosted online, this catalog compiles a vast assortment of documents, making it a veritable goldmine of knowledge. With its easy-to-use website interface and customizable PDF generator, this platform offers a user-friendly experience, allowing individuals to effortlessly navigate and access the information they seek. The availability of free PDF books and manuals on this platform demonstrates its commitment to democratizing education and empowering individuals with the tools needed to succeed in their chosen fields. It allows anyone, regardless of their background or financial limitations, to expand their horizons and gain insights from experts in various disciplines. One of the most significant advantages of downloading PDF books and manuals lies in their portability. Unlike physical copies, digital books can be stored and carried on a single device, such as a tablet or smartphone, saving valuable space and weight. This convenience makes it possible for readers to have their entire library at their fingertips, whether they are commuting, traveling, or simply enjoying a lazy afternoon at home. Additionally, digital files are easily searchable, enabling readers to locate specific information within seconds. With a few keystrokes, users can search for keywords, topics, or phrases, making research and finding relevant information a breeze. This efficiency saves time and effort, streamlining the learning process and allowing individuals to focus on extracting the information they need. Furthermore, the availability of free PDF books and manuals fosters a culture of continuous learning. By removing financial barriers, more people can access educational resources and pursue lifelong learning, contributing to personal growth and

professional development. This democratization of knowledge promotes intellectual curiosity and empowers individuals to become lifelong learners, promoting progress and innovation in various fields. It is worth noting that while accessing free Fet Circuits PDF books and manuals is convenient and cost-effective, it is vital to respect copyright laws and intellectual property rights. Platforms offering free downloads often operate within legal boundaries, ensuring that the materials they provide are either in the public domain or authorized for distribution. By adhering to copyright laws, users can enjoy the benefits of free access to knowledge while supporting the authors and publishers who make these resources available. In conclusion, the availability of Fet Circuits free PDF books and manuals for download has revolutionized the way we access and consume knowledge. With just a few clicks, individuals can explore a vast collection of resources across different disciplines, all free of charge. This accessibility empowers individuals to become lifelong learners, contributing to personal growth, professional development, and the advancement of society as a whole. So why not unlock a world of knowledge today? Start exploring the vast sea of free PDF books and manuals waiting to be discovered right at your fingertips.

FAQs About Fet Circuits Books

How do I know which eBook platform is the best for me? Finding the best eBook platform depends on your reading preferences and device compatibility. Research different platforms, read user reviews, and explore their features before making a choice. Are free eBooks of good quality? Yes, many reputable platforms offer high-quality free eBooks, including classics and public domain works. However, make sure to verify the source to ensure the eBook credibility. Can I read eBooks without an eReader? Absolutely! Most eBook platforms offer web-based readers or mobile apps that allow you to read eBooks on your computer, tablet, or smartphone. How do I avoid digital eye strain while reading eBooks? To prevent digital eye strain, take regular breaks, adjust the font size and background color, and ensure proper lighting while reading eBooks. What the advantage of interactive eBooks? Interactive eBooks incorporate multimedia elements, quizzes, and activities, enhancing the reader engagement and providing a more immersive learning experience. Fet Circuits is one of the best book in our library for free trial. We provide copy of Fet Circuits in digital format, so the resources that you find are reliable. There are also many Ebooks of related with Fet Circuits. Where to download Fet Circuits online for free? Are you looking for Fet Circuits PDF? This is definitely going to save you time and cash in something you should think about.

Find Fet Circuits :

boxless channel lineup insight communications welcome to

breitling watches manual
bridgemaster radar install manual
boy scout contributions to environmental science
box set bad ink series books ii vi
bravo 1 manual
~~boy of the painted cave test~~
~~bridge design manual lrfd inti~~
brickhouse security user manual
bridgeport ez track plus manual
brewery haccp planning
braun thermoscan 6013 user guide
breaking perfect english edition
~~bread dipping oil olive recipe~~
brian jones the making of the rolling stones

Fet Circuits :

y google cómo lo haría nuevas estrategias para lograr el - May 12 2023
web jan 27 2009 y google cómo lo haría book read 394 reviews from the world s largest community for readers a nadie sorprende la pregunta que plantea el título de e
y google como lo haria nuevas estrategias para lo boni - Jun 01 2022
web currently this y google como lo haria nuevas estrategias para lo as one of the most keen sellers here will totally be in the course of the best options to review del aprieto
y google como lo haria nuevas estrategias para lo boni - Sep 04 2022
web google como lo haria nuevas estrategias para lo as you such as by searching the title publisher or authors of guide you essentially want you can discover them rapidly
y google cómo lo haría nuevas estrategias para lograr el - Jul 14 2023
web may 11 2010 y google cómo lo haría nuevas estrategias para lograr el éxito empresarial spanish edition jarvis jeff on amazon com free shipping on
y google cómo lo haría nuevas estrategias para lograr el éxito - Mar 10 2023
web mar 28 2012 a nadie sorprende la pregunta que plantea el t iacute tulo de este libro y es que google ha sido la empresa

con el mayor crecimiento en el menor per iacute odo

la estrategia de google noticias internet euroresidentes - Feb 26 2022

web la estrategia de google el mercado está poniendo bajo presión a google pocas empresas son capaces en estos momentos de multiplicar por cuatro su beneficio neto

y google como lo haria nuevas estrategias para lo catherine - Dec 27 2021

web y google como lo haria nuevas estrategias para lo recognizing the pretension ways to acquire this book y google como lo haria nuevas estrategias para lo is

descargar y google cómo lo haría nuevas estrategias para - Oct 05 2022

web oct 16 2021 hagas lo que hagas google lo acabará haciendo mejor que tú y además gratis estarás preparado y google cómo lo haría nuevas estrategias para

y google cómo lo haría jeff jarvis planetadelibros - Feb 09 2023

web y google cómo lo haría de jeff jarvis hagas lo que hagas google lo acabará haciendo mejor que tú y además gratis estarás preparado

y google cómo lo haría nuevas estrategias para lograr el - Aug 15 2023

web mar 28 2012 es una marca cuya dimensión ha alcanzado cotas inusitadas y cuya gestión se ha convertido en ejemplar en todos los ámbitos con la voluntad de saber qué se esconde tras ese éxito y más

y google cÓmo lo harÍa nuevas estrategias - Nov 06 2022

web y google cÓmo lo harÍa nuevas estrategias para lograr el Éxito empresarial jarvis jeff 18 00 a nadie sorprende la pregunta que plantea el

pdf y google cómo lo haría nuevas estrategias para lograr - Apr 30 2022

web cartas eruditas y curiosas 4 en que por la mayor parte se continúa el designio del teatro critico universal impugnando o reduciendo a dudosas varias opiniones

y google como lo haria nuevas estrategias para lo enrique - Nov 25 2021

web aug 15 2023 kindly say the y google como lo haria nuevas estrategias para lo is universally compatible with any devices to read liderazgo intergeneracional jon

y google como lo haria nuevas estrategias para lo pedro - Oct 25 2021

web y google como lo haria nuevas estrategias para lo yeah reviewing a book y google como lo haria nuevas estrategias para lo could grow your close contacts listings

y google cÓmo lo harÍa nuevas estrategias - Dec 07 2022

web y google cÓmo lo harÍa nuevas estrategias para lograr el Éxito empresarial jarvis jeff 19 95 a nadie sorprende la

pregunta que plantea el

y google como lo haria nuevas estrategias para lo maría - Aug 03 2022

web y google como lo haria nuevas estrategias para lo this is likewise one of the factors by obtaining the soft documents of this y google como lo haria nuevas estrategias

y google como lo haria nuevas estrategias para lo - Jun 13 2023

web y google como lo haria nuevas estrategias para lo y google como lo haria jun 21 2023 a nadie sorprende la pregunta que plantea el título de este libro y es que

estrategias de google para triunfar universia - Mar 30 2022

web mar 26 2015 regla del 7 google cuenta con una política interna que obliga a generar un esquema jerárquico más plano donde se reduce la supervisión gerencial ampliando las

y google como lo haria jeff jarvis google books - Jan 08 2023

web may 11 2010 jeff jarvis grupo planeta gbs may 11 2010 business economics 327 pages a nadie sorprende la pregunta que plantea el título de este libro y es que

3 claves de la estrategia seo de google explicadas por google - Jan 28 2022

web jun 17 2020 3 consolidar google asegura que menos es más es decir tener menos sitios web o menos páginas pero ofrecer mayor calidad conduce a mejores resultados

y google como lo haria jeff jarvis casa del libro - Apr 11 2023

web con la voluntad de saber qué se esconde tras ese éxito y más importante aún qué podemos aprender de él jarvis nos descubre 40 sencillas reglas que toda empresa

y google como lo haria nuevas estrategias para lo catherine - Sep 23 2021

web this y google como lo haria nuevas estrategias para lo as one of the most in force sellers here will enormously be in the midst of the best options to review las claves de

y google como lo haria nuevas estrategias para lo dev rideicon - Jul 02 2022

web y google como lo haria nuevas estrategias para lo 3 3 the book provides well illustrated theory with exhaustive fully solved examples for learning this is followed with

n4 communication management communication module 7 - Dec 31 2022

web mar 25 2015 n4 communication management communication module 7 precis mar 25 2015 4 likes 5 427 views download now download to read offline education this slide show accompanies module 7 of n4 communication management communication published by future managers and developed by lynette steenkamp

management communication n4 study guide 2021 - Sep 08 2023

web welcome to management communication n4 the objective of this course is to equip you with a sound knowledge of business communication principles giving you deeper understanding of the subject and the role of effective communication in the business world is

communication and management communication n4 student book - Feb 01 2023

web developed especially for the tvet student at n4 level succeed in management communication n4 provides students with the necessary theoretical knowledge to write their exams and the practical application to enter the workplace confidently the textbooks covers the combined communication n4 and management communication syllabus

management communication n4 second paper - Apr 03 2023

web jun 2 2021 management communication n4 second paper 5140364 28 may 2021 x paper 09 00 11 00 closed book examination two dictionaries bilingual and or explanatory may be used this question paper consists of 10 pages 110q2j2128 department of higher education and training republic of south

management communication n4 business letters youtube - Jun 05 2023

web jun 15 2020 management communication n4 business letters lesson 4 module 9 part c presentation reference book n4 communication and management communication say it in plain english by frieda wade

management communication n4 interviewing mrs t v dlamini - Jul 26 2022

web apr 28 2020 management communication n4 interviewing mrs t v dlamini management communication n4 interviewing presentationreference book communication and management communication n4 by frieda

management communication n4 study guide s1 - Oct 29 2022

web damelin study guide management communication n4 version welcome note mission and vision statement of damelin student support words you need to know assessments course objectives prescribed and recommended books and websites module 1 basic principles of communication module 2 interpersonal relationships

communication and man comm n4 module 4 interviews youtube - Jul 06 2023

web apr 21 2020 lesson 5 hints for before during and after the interviewremember that these videos are for all n4 business studies students doing communication and manage

management communication n4 assignment studocu - Mar 22 2022

web management communication n4 assignment page 1 of 5 qualification national n diploma in human studocu n6 personnel management june 2018 memorandum ba n4 module 1 these are notes made by a student as a study package io n3 module 3 these are notes made by a student as a study package

management communication n4 second paper 5140364 - Aug 07 2023

web jun 2 2020 management communication n4 second paper 5140364 22 september 2020 y paper 13 00 16 00 closed book

examination two dictionaries bilingual and or explanatory may be used this question paper consists of

management communication n4 past papers study guides and - Sep 27 2022

web may 30 2022 list of management communication n4previous question papers on this section you will find management communication n4 previous exam question papers with memos dating from 2023 2022 2021 2020 2019 and more where applicable paper 1 and paper 2 are included

management communication past exam papers and memos - Oct 09 2023

web management communication management communication n4 past exam papers and memos from the year 2015 to the latest paper management communication past exam papers and memos for tvet fet colleges in south africa

management communication n4 first paper - Feb 18 2022

web national certificate management communication n4 first paper 5140364 13 november 2019 x paper 09 00 12 00 open book examination two reference works and two dictionaries may be used no electronic dictionaries may be used this question paper consists of 4 pages and 2 addenda copyright reserved please turn over

management communication n4 module 1 lesson 1 ms pj - Mar 02 2023

web jul 13 2020 about press copyright contact us creators advertise developers terms privacy policy safety how youtube works test new features nfl sunday ticket press copyright

management communication n4 second paper - Nov 29 2022

web national certificate management communication n4 second paper 5140364 19 november 2019 x paper 09 00 11 00 closed book examination two dictionaries bilingual and or explanatory are allowed this question paper consists of 6 pages department of higher education and training republic of

n4 communication management communication academia edu - Jun 24 2022

web textography a multi dimensional applied genre analysis of business writing in an educational institute mohammad awad alafnan using a multi dimensional methodology this study examined language use in an educational institute as a professional practice

n4 management communication paper 2 june 2021 studocu - Aug 27 2022

web jun 2 2021 n4 management communication paper 2 june 2021 national certificate management communication n studocu management communication n4 assignment 3 management communication n4 assignment 2 assignment 2 labour relations n 5 ify business studies lecture note 1st semester

n4 communication and management communication future managers - May 04 2023

web n4 communication and management communication r 335 71 add to cart authors f wade and l steenkamp isbn 978 1 77581 975 2 also available with this title a comprehensive lecturer guide ebook and hardcopy posters usb with powerpoint

slides and audio files study guide perfect for distance learning students or part time

management communication n4 module 1 basics of communication - Apr 22 2022

web management communication n4 management communication n4 study notes management communication n4 module 1 basics of communication define the term communication communication is defined as a two way process whereby information message is sent from one person sender through a channel to another receiver who

management communication n4 study notes ace my exams - May 24 2022

web 0 complete 0 5 steps management communication n4 module 1 basics of communication management communication n4 notes module 1 management communication n4 notes module 2 management communication n4 notes module 4 interviewing management communication n4 notes module 3 mass media

bs en iso 13920 2023 tc tracked changes welding - Dec 27 2021

web bs en iso 13920 2023 tc tracked changes welding general tolerances for welded constructions dimensions for lengths and angles shape and position british standard available for subscriptions

ts en iso 13920 kaynak toleransları free download pdf - Aug 03 2022

web mar 6 2018 ts en iso 13920 nisan 2002 kaynak kaynaklõ yapõlar için genel toleranslar uzunluk ve açõ boyutlarõ biçim ve konum 1 kapsam bu standard doğrusal lineer ve açõsal boyutlar için ve geleneksel atölye doğruluğunu temel alan dört tolerans sõnõfõnda kaynaklõ yapõlarõn biçim ve konumu için genel toleranslarõ kapsar

iso 13920 1996 en welding general tolerances for welded - Nov 06 2022

web international standard iso 13920 was prepared by the european committee for standardization cen in collaboration with iso technical committee tc 44 welding and allied processes subcommittee sc 10 unification of requirements in the field of metal welding in accordance with the agreement on technical cooperation between iso and

bs en iso 13920 2023 techstreet - Mar 10 2023

web jun 15 2023 bs en iso 13920 2023 welding general tolerances for welded constructions dimensions for lengths and angles shape and position standard by british standard european standard international organization for standardization 06 15 2023 view all product details most recent track it language available formats options

iso 13920 en standard eu - Dec 07 2022

web iso 13920 this document specifies general tolerances for linear and angular dimensions and for shape and position of welded structures in four tolerance classes based on customary workshop accuracy

une en iso 13920 european standards - Jul 02 2022

web feb 18 1997 general tolerances for welded constructions dimensions for lengths and angles shape and position iso 13920 1996 released 1997 02 18 english pdf immediate download 63 36 eur add to cart english hardcopy british standards

institution european standards and partners need

bs en iso 13920 1997 welding general tolerances for welded - Jul 14 2023

web british standard bs en iso 13920 1997 welding general tolerances for welded constructions dimensions for lengths and angles shape and position the european standard en iso 13920 1996 has the status of a british standard ics 25 160 bs en iso 13920 1997 committees responsible for this british standard

bs en iso 13920 97 bs general tolerances for welded scribd - Jan 08 2023

web bseniso 13920 1997 80 chiswick heh roa wean bsi british standards institution otis the independent aon body respon fx pepring teh ands presente uvew on ganda bato and te emul levels cuporste y oyal charter contract requirements a british sundar does not pupot to neue al he necessary provision of iru users of bush sanda ae response for

british standard 13920 discourse reconstructingjudaism org - Mar 30 2022

web june 14th 2018 british standard 13920 bs en iso 13920 1997 bsi standards purchase your copy of bs en iso 13920 1997 as a pdf download or hard copy directly from the official bsi shop all bsi british fusion welded joints in steel nickel titanium and their

bs en iso 13920 1997 sai global store - Oct 05 2022

web jan 15 1997 welding general tolerances for welded constructions dimensions for lengths and angles shape and position available format s hardcopy pdf superseded date 15 06 2023 language s english published date 15

loading - Jun 01 2022

web british standards institution 2023 cookies site map cookie settings

bs en iso 13920 2023 ansi webstore - Jun 13 2023

web bs en iso 13920 2023 welding general tolerances for welded constructions dimensions for lengths and angles shape and position british standard this document specifies general tolerances for linear and angular dimensions and for shape and position of welded structures in four tolerance classes based on customary workshop accuracy

bs en iso 13920 1997 ansi webstore - Feb 26 2022

web bs en iso 13920 1997 welding general tolerances for welded constructions dimensions for lengths and angles shape and position british standard specifies general tolerances for linear and angular dimensions and for shape and position of welded structures in four classes these being based on customary workshop accuracy

iso 13920 2023 en welding general tolerances for welded - Feb 09 2023

web 1 scope this document specifies general tolerances for linear and angular dimensions and for shape and position of welded structures in four tolerance classes based on customary workshop accuracy the main criterion for selection of a particular tolerance class is based on the functional requirements which are to be met

international is0 standard 13920 - Apr 11 2023
web is0 13920 1996 e foreword is0 the international organization for standardization is a worldwide federation of national standards bodies is0 member bodies the work of preparing international standards is normally carried out through is0 technical committees each member body interested in a subject for which
bs en iso 13920 2023 welding general tolerances for welded - Aug 15 2023
web bs en iso 13920 2023 welding general tolerances for welded constructions dimensions for lengths and angles shape and position publication year 2023 document status latest version of document abstract sets out general tolerances for linear and angular dimensions and for shape and position of welded structures in four tolerance classes
bs en iso 13920 1997 pdf scribd - Sep 04 2022
web bs en iso 13920 1997 free download as pdf file pdf or read online for free standard tolerante constructii metalice sudate
standard detayı tse - May 12 2023
web İptal standard tÜrk standardi ts no ts en iso 13920 kabul tarihi 8 04 2002 İptal tarihi 5 07 2023 hazırlık grubu tahribatsız muayene Özel daimi komitesi doküman tipi yürürlük durumu h İptal edilmiş standard withdrawn standard başlık kaynak kaynaklı yapılar için genel toleranslar uzunluk ve açı
en 12520 2010 2015 testing standarts furnitest - Apr 30 2022
web en 12520 2015 this european standard specifies the minimum requirements for the safety strength and durability of all types of domestic seating for adults it does not apply to ranked seating seating for non domestic use office work chairs office visitors chairs chairs for educational institutions outdoor seating and to links for linked
bs en iso 13920 1997 welding general tolerances for welded - Jan 28 2022
web bs en iso 13920 1997 welding general tolerances for welded constructions dimensions for lengths and angles shape and position withdrawn publication year 1997 document status old version of document newer versions abstract