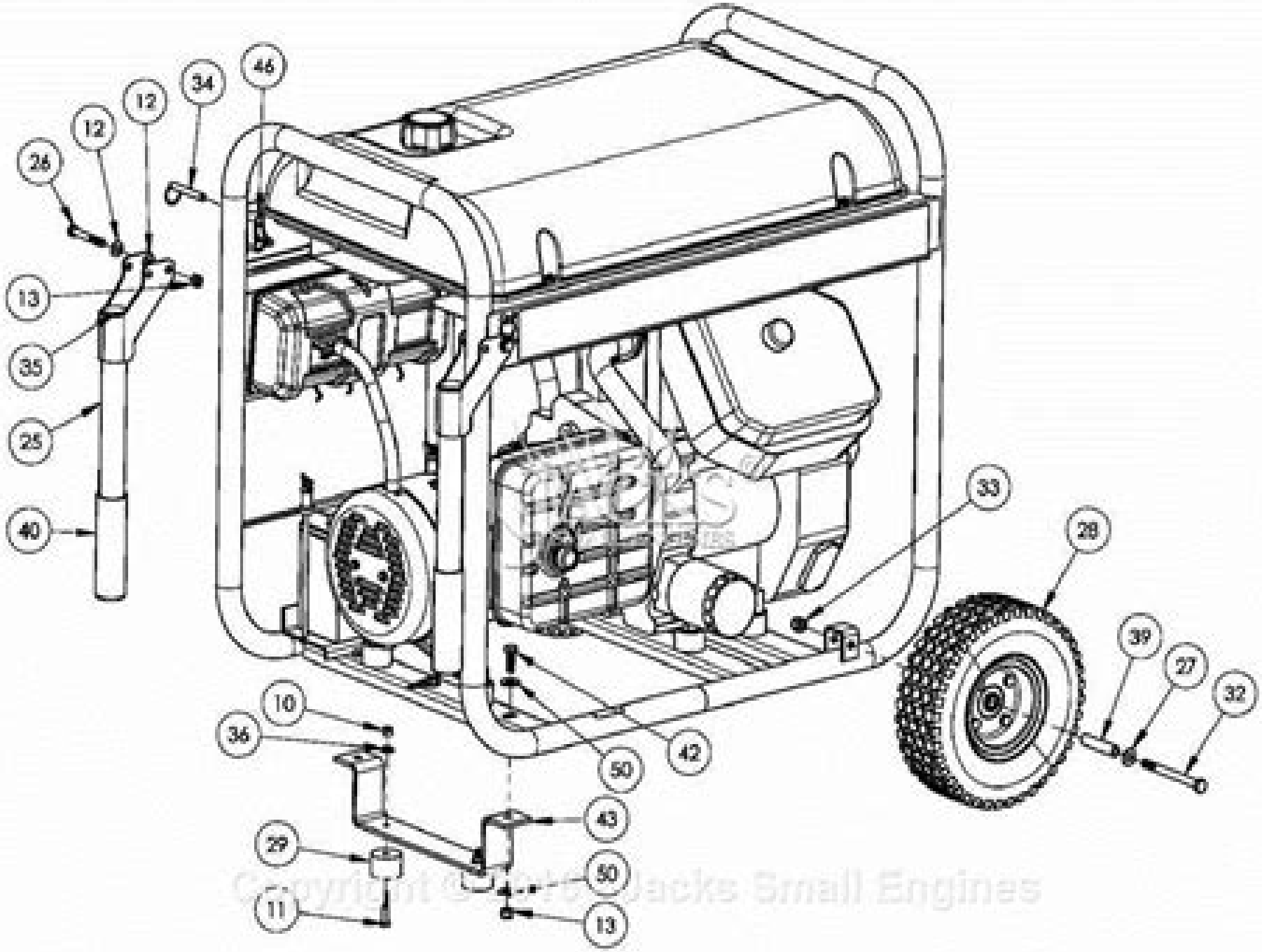

Copyright © Jack's Small Engines

# Coleman Generator Parts Manual

L Manion

**Coleman Generator Parts Manual:**

The Enigmatic Realm of **Coleman Generator Parts Manual**: Unleashing the Language is Inner Magic

In a fast-paced digital era where connections and knowledge intertwine, the enigmatic realm of language reveals its inherent magic. Its capacity to stir emotions, ignite contemplation, and catalyze profound transformations is nothing short of extraordinary. Within the captivating pages of **Coleman Generator Parts Manual** a literary masterpiece penned by a renowned author, readers set about a transformative journey, unlocking the secrets and untapped potential embedded within each word. In this evaluation, we shall explore the book is core themes, assess its distinct writing style, and delve into its lasting impact on the hearts and minds of people who partake in its reading experience.

https://rehabmart.x-shops.com/About/detail/index.jsp/15%20Prius%20Navigation%20Manual.pdf

**Table of Contents Coleman Generator Parts Manual**

1. Understanding the eBook Coleman Generator Parts Manual
    - The Rise of Digital Reading Coleman Generator Parts Manual
    - Advantages of eBooks Over Traditional Books
2. Identifying Coleman Generator Parts Manual
    - Exploring Different Genres
    - Considering Fiction vs. Non-Fiction
    - Determining Your Reading Goals
3. Choosing the Right eBook Platform
    - Popular eBook Platforms
    - Features to Look for in an Coleman Generator Parts Manual
    - User-Friendly Interface
4. Exploring eBook Recommendations from Coleman Generator Parts Manual
    - Personalized Recommendations
    - Coleman Generator Parts Manual User Reviews and Ratings
    - Coleman Generator Parts Manual and Bestseller Lists

5. Accessing Coleman Generator Parts Manual Free and Paid eBooks
    - Coleman Generator Parts Manual Public Domain eBooks
    - Coleman Generator Parts Manual eBook Subscription Services
    - Coleman Generator Parts Manual Budget-Friendly Options
6. Navigating Coleman Generator Parts Manual eBook Formats
    - ePub, PDF, MOBI, and More
    - Coleman Generator Parts Manual Compatibility with Devices
    - Coleman Generator Parts Manual Enhanced eBook Features
7. Enhancing Your Reading Experience
    - Adjustable Fonts and Text Sizes of Coleman Generator Parts Manual
    - Highlighting and Note-Taking Coleman Generator Parts Manual
    - Interactive Elements Coleman Generator Parts Manual
8. Staying Engaged with Coleman Generator Parts Manual
    - Joining Online Reading Communities
    - Participating in Virtual Book Clubs
    - Following Authors and Publishers Coleman Generator Parts Manual
9. Balancing eBooks and Physical Books Coleman Generator Parts Manual
    - Benefits of a Digital Library
    - Creating a Diverse Reading Collection Coleman Generator Parts Manual
10. Overcoming Reading Challenges
    - Dealing with Digital Eye Strain
    - Minimizing Distractions
    - Managing Screen Time
11. Cultivating a Reading Routine Coleman Generator Parts Manual
    - Setting Reading Goals Coleman Generator Parts Manual
    - Carving Out Dedicated Reading Time
12. Sourcing Reliable Information of Coleman Generator Parts Manual
    - Fact-Checking eBook Content of Coleman Generator Parts Manual
    - Distinguishing Credible Sources
13. Promoting Lifelong Learning

    - Utilizing eBooks for Skill Development
    - Exploring Educational eBooks
14. Embracing eBook Trends
    - Integration of Multimedia Elements
    - Interactive and Gamified eBooks


**Coleman Generator Parts Manual Introduction**

In this digital age, the convenience of accessing information at our fingertips has become a necessity. Whether its research papers, eBooks, or user manuals, PDF files have become the preferred format for sharing and reading documents. However, the cost associated with purchasing PDF files can sometimes be a barrier for many individuals and organizations. Thankfully, there are numerous websites and platforms that allow users to download free PDF files legally. In this article, we will explore some of the best platforms to download free PDFs. One of the most popular platforms to download free PDF files is Project Gutenberg. This online library offers over 60,000 free eBooks that are in the public domain. From classic literature to historical documents, Project Gutenberg provides a wide range of PDF files that can be downloaded and enjoyed on various devices. The website is user-friendly and allows users to search for specific titles or browse through different categories. Another reliable platform for downloading Coleman Generator Parts Manual free PDF files is Open Library. With its vast collection of over 1 million eBooks, Open Library has something for every reader. The website offers a seamless experience by providing options to borrow or download PDF files. Users simply need to create a free account to access this treasure trove of knowledge. Open Library also allows users to contribute by uploading and sharing their own PDF files, making it a collaborative platform for book enthusiasts. For those interested in academic resources, there are websites dedicated to providing free PDFs of research papers and scientific articles. One such website is Academia.edu, which allows researchers and scholars to share their work with a global audience. Users can download PDF files of research papers, theses, and dissertations covering a wide range of subjects. Academia.edu also provides a platform for discussions and networking within the academic community. When it comes to downloading Coleman Generator Parts Manual free PDF files of magazines, brochures, and catalogs, Issuu is a popular choice. This digital publishing platform hosts a vast collection of publications from around the world. Users can search for specific titles or explore various categories and genres. Issuu offers a seamless reading experience with its user-friendly interface and allows users to download PDF files for offline reading. Apart from dedicated platforms, search engines also play a crucial role in finding free PDF files. Google, for instance, has an advanced search feature that allows users to filter results by file type. By specifying the file type as "PDF," users can find websites that offer free PDF downloads on a specific topic. While downloading Coleman Generator Parts Manual free PDF files is

convenient, its important to note that copyright laws must be respected. Always ensure that the PDF files you download are legally available for free. Many authors and publishers voluntarily provide free PDF versions of their work, but its essential to be cautious and verify the authenticity of the source before downloading Coleman Generator Parts Manual. In conclusion, the internet offers numerous platforms and websites that allow users to download free PDF files legally. Whether its classic literature, research papers, or magazines, there is something for everyone. The platforms mentioned in this article, such as Project Gutenberg, Open Library, Academia.edu, and Issuu, provide access to a vast collection of PDF files. However, users should always be cautious and verify the legality of the source before downloading Coleman Generator Parts Manual any PDF files. With these platforms, the world of PDF downloads is just a click away.

## FAQs About Coleman Generator Parts Manual Books

How do I know which eBook platform is the best for me? Finding the best eBook platform depends on your reading preferences and device compatibility. Research different platforms, read user reviews, and explore their features before making a choice. Are free eBooks of good quality? Yes, many reputable platforms offer high-quality free eBooks, including classics and public domain works. However, make sure to verify the source to ensure the eBook credibility. Can I read eBooks without an eReader? Absolutely! Most eBook platforms offer web-based readers or mobile apps that allow you to read eBooks on your computer, tablet, or smartphone. How do I avoid digital eye strain while reading eBooks? To prevent digital eye strain, take regular breaks, adjust the font size and background color, and ensure proper lighting while reading eBooks. What the advantage of interactive eBooks? Interactive eBooks incorporate multimedia elements, quizzes, and activities, enhancing the reader engagement and providing a more immersive learning experience. Coleman Generator Parts Manual is one of the best book in our library for free trial. We provide copy of Coleman Generator Parts Manual in digital format, so the resources that you find are reliable. There are also many Ebooks of related with Coleman Generator Parts Manual. Where to download Coleman Generator Parts Manual online for free? Are you looking for Coleman Generator Parts Manual PDF? This is definitely going to save you time and cash in something you should think about.

## Find Coleman Generator Parts Manual :

~~2015 prius navigation manual~~
2015 sea ray maintenance manual
*2015 kenworth t2015 service manual*

**2015 mercedes sl500 manual**
**2015 kmtc inservice intake**
2015 mathcounts sprint answer
**2015 range rover sport hse lux manual**
*2015 paper for n28 july exams electronic industrial*
**2015 polaris sportsman 500 ho owners manual**
**2015 scripps national spelling bee**
~~2015 kawasaki zx6r service manual~~
~~2015 kawasaki zzr600 owners manual~~
**2015 polaris xc 700 service manual**
*2015 ktm 65sx manual*
*2015 ktm sx 250 repair manual*

**Coleman Generator Parts Manual :**

1984-1993-factory-service-manual.pdf ... free cloth. They must be kept spotlessly clean. Connecting rod bearing oil clearance check. 3 Clean the back side of the new upper bearing insert, then lay ... Jeep Service Manuals May 29, 2012 — Here is a site with PDF format Mopar - Chrysler OEM parts catalogs for your year XJ. These are handy because they show exploded views of every ... Repair Manuals & Literature for 1992 Jeep Cherokee Get the best deals on Repair Manuals & Literature for 1992 Jeep Cherokee when you shop the largest online selection at eBay.com. Free shipping on many items ... Free online repair manuals? : r/MechanicAdvice Key word being “free.” Looking for a source that would have a library of factory repair manuals - the kind technicians would actually use ... factory service repair manual madness Jun 10, 2016 — I have some manuals below. You'll notice that the 1995 manual covers Cherokee and Wrangler. The 2000 manual only covers the Cherokee. I believe ... Jeep Cherokee Repair & Service Manuals (740 PDF's Jeep Cherokee service PDF's covering routine maintenance and servicing; Detailed Jeep Cherokee Engine and Associated Service Systems (for Repairs and Overhaul) ... 1992 Service Manual? Oct 25, 2008 — If you want a reasonable book that will show you much of what you need to know for maintenance, some rebuild & repairs, and especially for those ... Free Online Auto Repair Manuals and Wiring Diagrams Download free Jeep repair manuals [pdf] for do-it-yourselfers. Each Jeep repair manual contains the detailed description of works and wiring diagrams... JEEP Cherokee XJ 1992-1996 Factory Workshop Manual Complete shop manual with easy, step by step instructions for the DIY mechanic or professional technician to help maintain, repair or restore the JEEP Cherokee ... Jeep Cherokee 1984-2001 Workshop Repair Manual ... Official Jeep Cherokee Workshop Manual is the complete Service Repair

Information System containing comprehensive illustrations and Wiring diagrams, accurate, ... Acura TL and CL Service Manual Mar 7, 2017 — Acura Inspire. 216 subscribers. Free Acura TL CL Service Manual PDF Download - 1999, 2000, 2001, 2002, 2003. Acura Inspire. Search. Info. 2002 acura tl service repair manual by jhjsnefyudd Jul 27, 2017 — Read 2002 acura tl service repair manual by jhjsnefyudd on Issuu and browse thousands of other publications on our platform. Start here! Acura TL Service Repair Manual free download Acura Tl (gasoline engine) 1999-2008 - repair manual and maintenance manual, wiring diagrams, instruction manual and owners manual free download. 1999- 2003 Acura 3.2L TL Service Repair Manual This 99-03 Acura 3.2L TL Factory Service Repair Manual will contain the same information as the original manual(s) and provides information on diagnosis, ... Acura TL Repair & Service Manuals (69 PDF's Get your hands on the complete Acura factory workshop software. Download now. Other Manuals 1613 Pages. Acura - TL - Workshop Manual - 2002 - 2008. View pdf. Acura 3.2 TL Service Repair Manual 1999 2000 2001 2002 ... May 20, 2018 - Acura 3.2 TL Service Repair Manual 1999 2000 2001 2002 2003 PDF,Utilizing these guidebook is a low-cost method to maintain your Acura RL 3.5. Acura TL 99-03 Service Manual (standard, Type-S) Acura TL 1999, 2000, 2001, 2002, 2003 Service Repair Owners Manual, Maintenance, Wiring Diagrams, PDF, Download. 1999-2003 Acura 3.2 TL Repair Shop Manual Factory ... This factory information shows you how to repair your vehicle. With step-by-step instructions, clear pictures, exploded view illustrations, schematics, ... Acura TL Service Repair Manual & EWD - Wiring Diagrams 2002 ACURA TL Service Manual Download Acura TL 2003 EWD Wiring Diagrams ... 2009-2010 ACURA TL SERVICE REPAIR MANUAL. Acura TL General Information Service Manual ... Service & Repair Manuals for Acura TL Get the best deals on Service & Repair Manuals for Acura TL when you shop the largest online selection at eBay.com. Free shipping on many items | Browse ... Wally Olins The Brand Handbook /anglais A remarkable guide to have as an inspiration when branding your company, or even yourself. This book doesn't intend be a deep reading, it is a guide that points ... Wally Olins: The Brand Handbook Here,Wally Olins sets out the ground rules for branding success in the 21st century, explaining why understanding the links between business, brand and ... The Brand Handbook by Wally Olins (2-Jun-2008) Hardcover A remarkable guide to have as an inspiration when branding your company, or even yourself. This book doesn't intend be a deep reading, it is a guide that points ... Wally Olins The Brand Handbook /anglais This book is about brands, specifically what they are and how to create then manage one. In the beginning of the book, Olins gives examples of branding, as seen ... Wally Olins: The Brand Handbook Jun 2, 2008 — Here,Wally Olins sets out the ground rules for branding success in the 21st century, explaining why understanding the links between business ... List of books by author Wally Olins Looking for books by Wally Olins? See all books authored by Wally Olins, including Corporate Identity, and Brand New.: The Shape of Brands to Come, ... Wally Olins: The Brand Handbook ISBN: 9780500514085 - Paperback - THAMES HUDSON - 2008 - Condition: Good - The book has been read but remains in clean condition. Wally Olins : the brand handbook Wally Olins sets out the ground rules for branding success in the 21st century,

explaining why understanding the links between business, brand and consumer ... The Brand Handbook by Wally Olins Paperback Book ... Wally Olins: The Brand Handbook by Wally Olins Paperback Book The Fast Free · World of Books USA (1015634) · 95.7% positive feedback ... Wally Olins - The Brand Handbook (Hardcover) Here, Wally Olins sets out the ground rules for branding success in the 21st century, explaining why understanding the links between business, brand and ...